IPIECA

Petroleum refining water/wastewater use and management

Operations Best Practice Series

2010

www.ipieca.org

IPIECA

The global oil and gas industry association for environmental and social issues

5th Floor, 209–215 Blackfriars Road, London SE1 8NL, United Kingdom
Telephone: +44 (0)20 7633 2388 Facsimile: +44 (0)20 7633 2389
E-mail: info@ipieca.org Internet: www.ipieca.org

© IPIECA 2010 All rights reserved.

No part of this publication may be reproduced, stored in a retrieval system, or transmitted in any form or by any means, electronic, mechanical, photocopying, recording or otherwise, without the prior consent of IPIECA.

This publication is printed on paper manufactured from fibre obtained from sustainably grown softwood forests and bleached without any damage to the environment.

Petroleum refining water/wastewater use and management

IPIECA Operations Best Practice Series

This document was prepared by AECOM, Inc. on behalf of the IPIECA Refinery Water Management Task Force. The assistance of M. Venkatesh of ENSR–AECOM is gratefully acknowledged.

Cover photographs reproduced courtesy of the following (clockwise from top left): ExxonMobil; Nexen; Photodisc Inc.; iStockphoto; Corbis; Shutterstock.com.

Contents

Introduction **2**

Refinery water overview **3**

Overall refinery water balance 3

Sources of water 3

Water leaving the refinery 4

Raw water treatment: 5

Use of raw water in refineries 5

Wastewater **8**

Process water 8

Desalter effluent 8

Sour water 11

Tank bottom draws 13

Spent caustic 14

Cooling water 16

Cooling tower blowdown—best practices 18

Condensate blowdown 18

Boiler blowdown 18

Steam generator blowdown 18

Unrecovered condensate 18

Condensate blowdown—best practices 20

Raw water treatment 20

Raw water treatment—best practices 20

Miscellaneous discharges—best practices 20

Miscellaneous discharges—minimization 21

Laboratory wastewater 21

Spent/unused hydrocarbons samples—best practices 21

Spent/unused wastewater samples—best practices 21

Discharges from laboratory sinks—best practices 21

Discharges from bottle washing systems—best practices 21

Stormwater and sewerage **22**

Stormwater segregation and management 22

Contaminated stormwater 22

Non-contaminated stormwater 23

Sewerage management 24

Effluent treatment **25**

Process wastewater pretreatment 25

Desalter effluent treatment 25

Wastewater segregation 27

Primary treatment 28

First stage: separation (oil/water separators, API separators) 28

Secondary oil/water separation 29

Equalization system 30

Location of the equalization system 31

Secondary treatment 31

Suspended growth processes 31

Attached growth processes 35

Tertiary treatment 38

Sand filtration 38

Activated carbon 38

Chemical oxidation 39

Treatment of sludges 40

API separator bottom sludge 40

DGF/IGF float and sludge 40

Waste biological sludge 41

Recycle and reuse issues **42**

Re-use of non-contaminated stormwater 43

Fire water 43

Cooling tower makeup water 43

Utility water 43

Boiler feedwater makeup 43

Technologies for upgrade of refinery wastewater 43

Basic media/sand filtration 44

Microfiltration or ultrafiltration 45

Microfiltration or ultrafiltration, with reverse osmosis 47

Microfiltration or ultrafiltration, with nanofiltration 48

Ion exchange 48

Technology summary—refinery wastewater reuse 50

Reuse of municipal wastewater 50

Media filtration 51

Microfiltration or ultrafiltration 51

Microfiltration or ultrafiltration, plus reverse osmosis 52
Microfiltration or ultrafiltration, plus nanofiltration 53
Ion exchange 53
Zero liquid discharge 53
References 55

List of Tables

Table 1 Typical sources of water 4
Table 2 Contaminants in raw water 7
Table 3 Sources of wash water 9
Table 4 Desalter effluent contaminants 10
Table 5 Sour water producers 12
Table 6 Stripped sour water contaminants 12
Table 7 Crude tank bottom sediment and water contaminants 14
Table 8 Intermediate product stream—caustic treated 14
Table 9 Cooling tower blowdown—contaminants 18
Table 10 Contaminant specification for reuse water 42
Table 11 Refinery wastewater reuse—summary 50

List of Figures

Figure 1 Refinery water balance 3
Figure 2 Typical desalter configuration 8
Figure 3 Sour water stripper configuration 11
Figure 4 Crude tank water draw 13
Figure 5 Typical distillation system 16
Figure 6 Once-through cooling water system 17
Figure 7 Closed loop cooling system 18
Figure 8 Evaporative cooling water system 19
Figure 9 Boiler blowdown—typical 19
Figure 10 Steam generator blowdown—typical 19
Figure 11 Typical refinery wastewater treatment 25
Figure 12 Desalter oil/water separation 26
Figure 13 Desalter effluent stripper 26
Figure 14 Segregated wastewater treatment 27
Figure 15 API separator 28
Figure 16 Dissolved air flotation—a typical DAF unit 29
Figure 17 Induced air flotation (IAF) unit 30
Figure 18 Activated sludge system 32
Figure 19 The PACT® (Powdered Activated Carbon Treatment) system 33
Figure 20 Sequencing batch reactor system 34
Figure 21 Membrane bioreactor system 34
Figure 22 Aerated lagoon system 35
Figure 23 Trickling filters 36
Figure 24 Rotating biological contractor system 36
Figure 25 Nitrification/denitrification system 37
Figure 26 Sand filtration 38
Figure 27 Activated carbon system 39
Figure 28 Chemical oxidation system 39
Figure 29 API sludge treatment system 40
Figure 30 DGF/IGF float treatment 41
Figure 31 Biological sludge treatment 41
Figure 32 Contaminant removal for different types of filtration processes 44
Figure 33 Media filtration 45
Figure 34 Microfiltration or ultrafiltration 46
Figure 35 Microfiltration or ultrafiltration, with reverse osmosis 47
Figure 36 Microfiltration or ultrafiltration, with nanofiltration 48
Figure 37 Ion exchange treatment 49
Figure 38 Media filtration 51
Figure 39 Microfiltration/ultrafiltration 52
Figure 40 Microfiltration/ultrafiltration, plus reverse osmosis 52
Figure 41 Microfiltration/ultrafiltration, plus nanofiltration 53
Figure 42 Zero liquid discharge 53

Introduction

This manual describes typical 'best practices' and strategies used in petroleum refineries to manage water, including ways to reduce water usage. Improved water management in a petroleum refinery can potentially reduce the volume and cost of raw water used in refinery operations. Furthermore, improved water management may result in reductions in wastewater flow or contaminant load or both. Lower flow and contaminant load may result in lower wastewater treatment operating and maintenance costs. Optimized water management may also reduce the mass of contaminants in the treated effluent, thus improving the quality of a wastewater discharge and ultimately the environmental impact of a refinery's discharge.

These practices are a collection of operational, equipment and procedural actions related to water management in a refinery. Since each refinery is uniquely configured, some of these practices may or may not be applicable based on the complexity of the refining operations, type of wastewater treatment operations available at a particular site, availability of raw water sources, discharge configuration and type of receiving water body. This manual will enable a refiner to compare their operations with typical industry practices and develop a plan for optimizing water management in the refinery.

The manual is organized as follows:

- Introduction
- Refinery water overview
- Wastewater
- Stormwater and sewerage
- Effluent treatment
- Recycle and reuse issues

Refinery water overview

Petroleum refineries are complex systems of multiple operations that depend on the type of crude refined and the desired products. For these reasons, no two refineries are alike. Depending on the size, crude, products and complexity of operations, a petroleum refinery can be a large consumer of water, relative to other industries and users in a given region. Within a refinery, the water network is as unique to the refinery as its processes. This section describes the typical sources of water supplied to a refinery and the typical discharges of water from a refinery. It also provides an overview of the types of contaminants contained in the raw water and the methods used to remove these contaminants.

Overall refinery water balance

Many of the processes in a petroleum refinery use water, however, not each process needs raw or treated water, and water can be cascaded or reused in many places. A large portion of the water used in a petroleum refinery can be continually recycled with in a refinery. There are losses to the atmosphere, including steam losses and cooling tower evaporation and drift. A smaller amount of water can also leave with the products. Certain processes require a continuous make-up of water to the operation such as steam generating systems or cooling water systems. Understanding water balance for a refinery is a key step towards optimizing water usage, recycle and reuse as well as optimizing performance of water and wastewater treatment systems.

Figure 1 shows a typical example of the water balance in a refinery.

Sources of water

Surface water

Water to the refinery can be supplied from various surface-water sources such as rivers or lakes. In some cases it may also be supplied from the sea or from other brackish water sources. Additional supply of water can come from groundwater located in aquifers, if the subsurface water is available and accessible. Typical characteristics of raw water can include varying amounts of solids and/or salts, also referred to as total suspended solids (TSS), total dissolved solids (TDS) and turbidity. Each water body

Figure 1 *Refinery water balance*

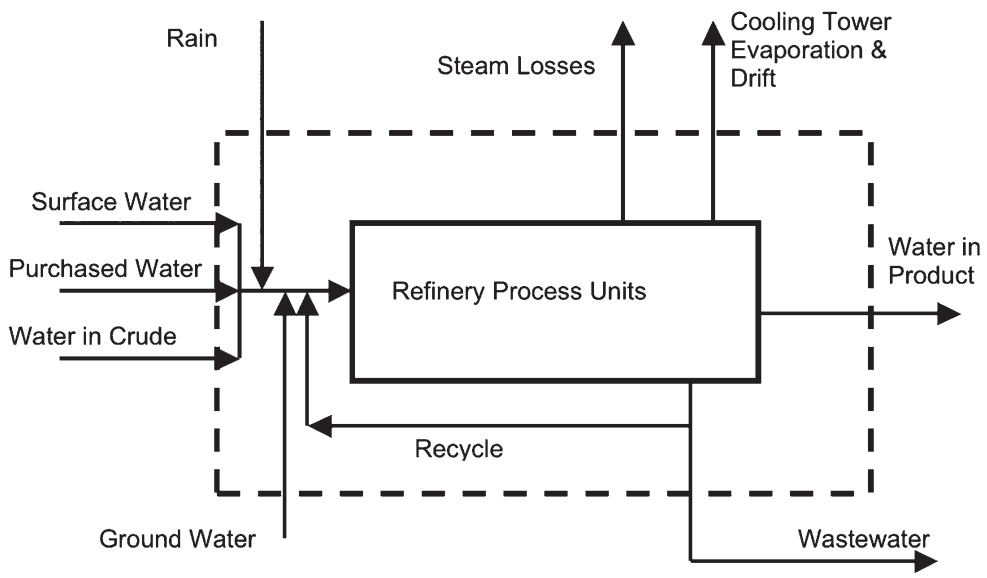

A schematic example of the typical water balance in a refinery

Table 1 *Typical sources of water*

Source	Typical characteristics
Lake	Suspended solids, dissolved solids (metals), turbidity
River	Suspended solids (with seasonal variation), dissolved solids (metals), turbidity
Groundwater (wells)	Suspended solids, dissolved solids (metals), dissolved organics
Sea water	Suspended solids, dissolved solids (metals, chlorides)

and aquifer has a unique quality associated with it and may require treatment before use in a refinery. The level of pretreatment required for source water before it is used in the refinery is dependent on the uses of the water in the refinery and what level of solids and salts is compatible with the process.

Table 1 shows the types of water sources and typical characteristics of the water from each source.

Purchased water

Water can also be supplied from a municipality. Municipalities generally can offer potable water (drinking water) but may also be able to offer a treated effluent for industrial use or reuse. Potable water (drinking water and sanitary water) required by a refinery is frequently purchased from a local municipality. If available, potable water may also come from groundwater aquifers or alternative sources.

Water in crude

When crude arrives at a refinery, it often carries entrained water that remains from the oil well extraction process and/or pickup during transshipment. The water is typically removed as storage tank bottom sediment and water (BS&W) or in the desalter which is part of the crude unit in the refinery, and is typically sent to wastewater treatment.

Rain

Another source of water for a refinery is rain. Rain that falls within the refinery battery limits is typically treated before discharge. Rain that falls in non-industrial areas of a refinery, e.g. parking lots, green areas or administrative housing, may be discharged without treatment depending on local regulations. Stormwater harvesting can be a technique that is employed to capture uncontaminated stormwater. With proper storage and or treatment (if needed) this stormwater can be used for certain processes such as equipment washing.

Water leaving the refinery

The water that leaves refineries is indicated in Figure 1 and described briefly below.

Wastewater

Refineries can generate a significant amount of wastewater that has been in contact with hydrocarbons. Wastewater can also include water rejected from boiler feedwater pretreatment processes (or generated during regenerations). Wastewater can also refer to cooling tower blowdown stream, or even once-through cooling water that leaves the refinery. Once-through cooling water typically does not receive any treatment before discharge. Cooling tower blowdown water and wastewater from raw water treating may or may not receive treatment at the wastewater treatment plant (WWTP) before discharge. Contaminated wastewater is typically sent to either a wastewater treatment plant that is located at the facility, or it can be pretreated and sent to the local publicly owned treatment works or third-party treatment facility for further treatment. Water that has not been in direct contact with hydrocarbons or which has only minimal contamination can be a source for reuse and is discussed in the section on '*Recycle and reuse*

issues', beginning on page 42 of this document. Wastewater can sometimes also be reused after passing through the wastewater treatment plant, sometimes requiring additional treatment to remove suspended solids and other contaminants.

Steam losses
Low pressure steam that is produced in the refinery is vented to the atmosphere when it is in excess. Other sources include tracing steam that is vented at some locations in the refinery. Proper monitoring of the steam system in the refinery will help minimize the production of excess steam and minimize/ eliminate the need for venting. Any expected losses should be considered when reviewing the water balance in a refinery.

Cooling tower losses
As water is cooled in the tower by evaporation, this results in a loss of water in the refinery. Some of the water in the cooling tower is entrained by the large quantities of air passing through the tower and are lost to the atmosphere. These entrainment losses are also referred to as cooling tower drift. Any expected losses from cooling towers should be considered when reviewing the water balance in a refinery. In some cases once-through cooling water is used in the refinery (see overleaf, and page 17).

Water in product
There is some water that leaves with some of the products in the refinery although this is a very small amount because it is limited by product quality specifications.

Raw water treatment

Source water for a refinery typically needs to be treated before being used in different processes. The type of treatment depends on the quality of the source water and its ultimate use in the refinery. Turbidity, sediments and hardness are examples of source water constituents that may require treatment. Water having a high mineral content is generally referred to as 'hard water' and has a tendency to form scale. Calcium salts are deposited as scale when water is heated causing a decrease in heat transfer rates in heat exchangers (heaters and coolers). Both calcium and magnesium salts form scale upon evaporation of water in steam-generating equipment. These deposits not only reduce heat transfer rates but also restrict fluid flow. Removal of calcium and magnesium from water is referred to as softening, and the treatments commonly used include lime-soda, phosphates, ion exchange and reverse osmosis. Other contaminants that could be present in raw water and their removal methods are shown in Table 2.

Use of raw water in refineries

The required degree of water purity depends on the particular use. Preliminary treatment of all raw water entering a plant may include screening and sedimentation to remove suspended solids, but subsequent treatment will depend on the ultimate use for each water system. A typical plant water supply might be separated into process, boiler feed, cooling, potable, fire water and utility water systems.

Brief descriptions of the different water uses in refineries are given below.

Process water
In refineries, water is typically used for various purposes where the water is closely contacted with the hydrocarbons. Softened water is usually used for these purposes.

Boiler feedwater
The boiler feedwater (BFW) required for the generation of steam in a refinery needs to be treated prior to use. The higher the steam pressure being generated, the higher the purity of the BFW required. Ordinarily water is treated by the lime-soda process and further purified by ion exchange or by hot phosphate treatment in order to produce boiler feedwater. Reverse osmosis can also be used to soften the water.

Typically, a purge stream is removed from the water purification systems in order to prevent the buildup of contaminants. This purge stream is sent to wastewater treatment and is replaced by fresh makeup water.

Cooling water

Water-cooled condensers, product coolers (heat exchangers) and other heat exchangers can use a large amount of water in a refinery. Some refineries use air coolers, where the process stream is exchanged with air prior the being sent to a cooling water heat exchanger. This will minimize the use of cooling water in the refinery.

Some refineries use a once-through system where the incoming water is exchanged against the process fluid and the warmer cooling water is then returned to the source of the water. However, if water is a scarce commodity at a particular location it may be preferable to recirculate the water through a cooling tower and then back to the process. In these circulating systems water is supplied at about 90° F and returned to the cooling tower at a maximum of about 120°F.

Some water treatment is necessary even for once-through cooling systems to prevent scale formation, corrosion, and slime and algae formation. The extent of treatment required for circulating systems is much greater since impurities are concentrated in the system as evaporation losses occur.

In cooling tower systems, a build-up of salt concentration is unavoidable since water is evaporated in the cooling tower. Make-up water is required to replace these and other losses.

Sea water has been used successfully as cooling water especially in coastal areas with fresh water shortages. Cathodic protection systems employing magnesium anodes located in the floating head and channel of exchangers prevent excessive corrosion. Deposits are minimized by restricting cooling water temperature increase below the point where the calcium salts begin to precipitate.

Potable water

Potable water is required for use in kitchens, wash areas and bathrooms in refineries as well as in safety showers/eyewash stations. City water or treated groundwater can be used for this purpose. In remote locations or in small towns a portion of the treated water from the plant softening unit may be diverted for potable water use. The treated water must be chlorinated to destroy bacteria, and then pumped in an independent system to prevent potential cross-contamination. Potable quality water may also be required in some specialist chemical operations (e.g. as a diluent).

Fire water

The requirements for fire water in refineries are intermittent, but can constitute a very large flow. Often, refineries collect stormwater from non-process areas and store it in a reservoir dedicated to the fire water system in the plant.

Provisions are typically made for a connection (for use in emergency situations) of the fire water system into the largest available reservoir of water. Usually this is the raw water supply since fire water requires no treatment. Sea water or brackish water is often used as fire water by plants located along coastal areas.

Utility water

Utility water is used for miscellaneous washing operations, such as cleaning an operating area. It should be free from sediment but does not require any other treatment.

Table 2 shows the typical impurities in various types of water and the processes generally used to remove them.

Table 2 *Contaminants in raw water*

Contaminant	Problem	Removal methods
Turbidity	Makes water cloudy and deposits in water lines and process equipment	Coagulation, settling and filtration
Hardness	Primary source of scale formation in heat exchangers and pipe lines	Softening, distillation, surfactants
Alkalinity	Causes foaming in steam systems and attacks boiler steel. Bicarbonate and carbonate produce carbon dioxide in steam which is highly corrosive	Lime and lime-soda softening, Zeolite softening, Dealkalization by anion exchange
Sulphate	Adds to the solids content of water and combines with calcium to form calcium sulfate scale	Demineralization, distillation
Chloride	Adds to solids content and increases the corrosive properties of water	Demineralization, distillation, desalination (if sea water is being used)
Silica	Scaling on heating and cooling equipment and pipelines	Anion exchange resins, distillation
Iron and magnesium	Discolors the water and precipitates in water lines and process equipment	Aeration, coagulation and filtration, lime softening, cation exchange
Oil	Source of scale, sludge and foaming in boilers. Impedes heat exchange. Undesirable in most processes	Oil/water separators strainers. coagulation and filtration. Diatomaceous earth filtration
Oxygen	Corrosion of water lines heat exchange equipment, boilers, return lines, etc.	Deaeration, sodium sulphite, corrosion inhibitors
Hydrogen sulphide	Cause of 'rotten egg' odor. Corrosion, toxicity	Aeration, chlorination, highly basic anion exchange
Conductivity	Conductivity is the result of ionizable solids in solution. High conductivity can increase the corrosive characteristics of a water	Processes which decrease dissolved solids content will decrease conductivity. Examples are demineralization, lime softening
Dissolved solids	'Dissolved solids' is the measure of total amount of dissolved material. High concentrations of dissolved solids are objectionable because of process interference and as a cause of foaming in boilers	Various softening process, such as lime softening and cation exchange by zeolite, will reduce dissolved solids. Demineralization, distillation
Suspended solids	'Suspended solids' is the measure of undissolved matter. Suspended solid plug lines, cause deposits in heat exchange equipment, boilers, etc.	Sedimentation. Filtration, usually preceded by coagulation and settling

Wastewater

This section describes the various sources of process water in refineries and discusses best practices with respect to how they are managed. Also included is a discussion of the wastewater generated from the different utility systems in the refinery and how these systems are managed. Finally, concepts for pretreatment of wastewater generated in the process units are discussed.

Process water

Process water is defined as water that has been in intimate contact with hydrocarbons in the refinery. Water that is generated in the process units is represented by the following categories:

- desalter effluent;
- sour water;
- tank bottom draws; and
- spent caustic.

Desalter effluent

Inorganic salts are present in crude oil as an emulsified solution of salt (predominantly sodium chloride). The source of the aqueous phase is the naturally occurring brine that is associated with the oil field from where the crude is extracted. The amount of water received at the refinery with the crude varies widely but an approximate range would be 0.1–2.0% volume.

The salts contained in the aqueous phase are variable and range from 10 to 250 pounds per thousand barrels (p.t.b.) of crude. The salts are present mostly in the form of chlorides of sodium, magnesium and calcium. Typically, the first operation in a refinery crude unit is desalting, which is used to wash out the salt present in the crude. The most important reasons for removing the salts from the crude are to:

- prevent plugging and fouling of process equipment by salt deposition; and
- reduce corrosion caused by the formation of HCl from the chloride salts during the processing of the crude.

There are two basic types of desalters: chemical and electrical. Refineries that use two-stage electrical desalters can achieve a desalted crude specification of 0.1 p.t.b. of salt in the crude. The wash water that is used in the desalter is discharged from the unit. Figure 2 shows the typical configuration of a two-stage desalter.

Figure 2 *Typical desalter configuration*

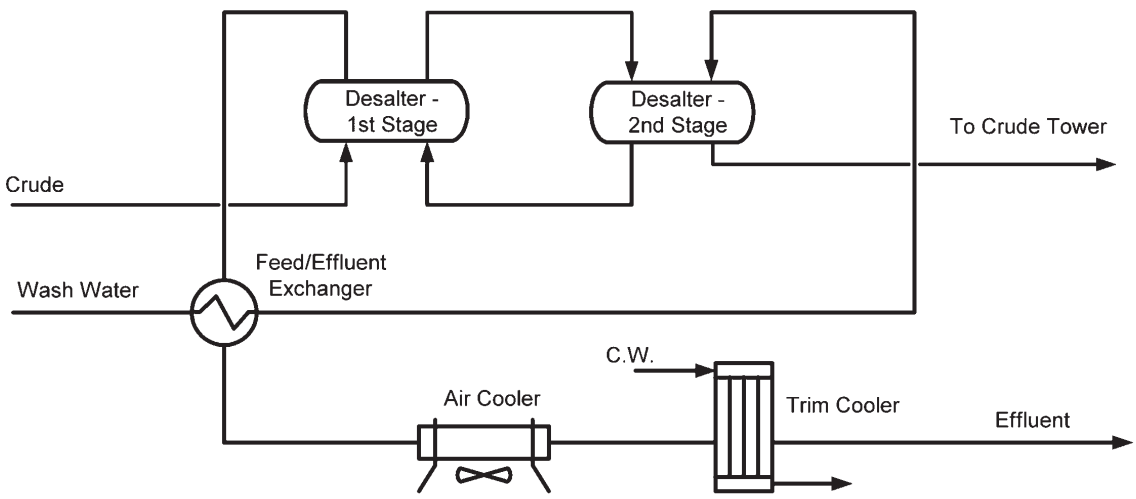

The wash water is usually injected into the second stage of the desalter after being heated by exchange with the hot effluent. The water from the second stage is sent to the first stage where it is contacted with the incoming crude. The hot (about 300°F) brine is then discharged to the wastewater treatment plant after being cooled. The optimum operating pH in the desalter is 6 to 7 because the emulsion formation is minimized and the oil/water separation is most effective at this pH. The pH is significantly impacted by source of the wash water that is used as well as corrosion considerations in the crude tower system.

Table 3 *Sources of wash water*

Source	Advantages	Disadvantages
Fresh water	1. The water requires no or minimal pretreatment	1. Increases overall water usage in the refinery 2. Increases generation of wastewater in the refinery 3. Increases capital and operating costs for wastewater treatment
Recycled crude tower overhead	1. Results in lower sour water stripping requirements 2. Avoids the piping required to send the crude tower overhead to the sour water strippers 3. Minimizes fresh water use in the refinery	1. More challenging to control the pH in the desalters due to the ammonia content of the crude tower overhead 2. Results in more emulsion formation in the desalters leading to the inadvertent discharge of hydrocarbons to wastewater treatment 3. Results in the discharge of H_2S from the desalter effluent to the atmosphere in the sewers as well as wastewater treatment if effluent does not go for pretreatment before discharge to sewers or wastewater treatment
Recycled vacuum tower overhead supplemented by sources of water	1. Results in lower sour water stripping requirements 2. Avoids the piping required to send the crude tower overhead to the sour water strippers 3. Minimizes fresh water use in the refinery	1. More challenging to control the pH in the desalters due to potential ammonia content of the vacuum tower overhead 2. Results in more emulsion formation in the desalters leading to the inadvertent discharge of hydrocarbons to wastewater treatment 3. Results in the discharge of H_2S from the desalter effluent to the atmosphere in the sewers as well as wastewater treatment if effluent does not go for pretreatment before discharge to sewers or wastewater treatment
Recycled stripped sour water	1. The phenol contained in the stripped sour water is extracted into the crude resulting in significantly lowering the phenol content of the effluent. 2. The lower phenol content results in lower capital and operating costs for wastewater treatment. 3. Allows better pH control in the desalter	1. Routing all sour water generated in the plant results in requiring a large sour water stripper 2. Increase the piping required to convey the crude and vacuum tower overhead to the sour water stripper

Some of the drilling muds that come in with the crude tend to accumulate in the desalter and need to be removed. This can be done either continuously or periodically. Some desalters have a continuous mud washing system in which the muds are not allowed to accumulate in the vessel. Most refineries do the mud washing on an intermittent basis (typically once a shift) by temporarily increasing the wash water flow to the mud washing nozzles located at the bottom of the desalter. However, when this operation is carried out it can result in increased discharges of hydrocarbons to the wastewater treatment system.

Oil/water interface control is an important aspect of the design and operation of desalters. There are a number of interface controllers that are available in the marketplace and one such system uses high frequency electromagnetic measurement to detect the interface. Control of the oil/water interface will help minimize/eliminate the inadvertent discharges of hydrocarbons to the wastewater treatment systems.

The wash water used in desalters is typically 5 to 8% of the crude throughput. The source of wash water that is used in the desalters varies widely in different refineries. Table 3 describes the various sources that are used and discusses the advantages and disadvantages of each source.

The level of contaminants contained in the desalter is highly variable depending on factors such as:

- operating pH of the desalter (higher pH results in more emulsions);
- effectiveness of the interface control device in the desalter; and
- frequency and effectiveness of the mudwash.

Table 4 shows the expected concentration of containments in desalter effluent.

Desalter—summary of best practices

- Avoid using fresh water as wash water in the desalter.
- Preferentially use stripped phenolic sour water as wash water.
- Operating pH in the desalter should be optimized to about 6–7.
- Use proper interface probes in the desalter for effective oil/water separation.
- Consider diverting desalter brine to a separate tank where solids can drop out during mud washing operations.

Table 4 *Desalter effluent contaminants*

Contaminant	Expected concentration (mg/l)
Chemical oxygen demand (COD)	400 to 1000
Free hydrocarbons	Up to 1000
Suspended solids	Up to 500
Phenol	10 to 100
Benzene	5 to 15
Sulphides	Up to 100
Ammonia	Up to 100

Sour water

Steam is used in many processes in refineries as a stripping medium in distillation and as a diluent to reduce the hydrocarbon partial pressure in catalytic cracking and other applications. The steam is condensed as an aqueous phase and is removed as sour water. Since this steam condenses in the presence of hydrocarbons, which contain hydrogen sulphide (H_2S) and ammonia (NH_3), these compounds are absorbed into the water at levels that typically require treatment.

The typical treatment for sour water is to send it to a stripper for removal of H_2S and NH_3. Steam is used to inject heat into the strippers. High performance strippers are able to achieve < 1 ppm H_2S and < 30 ppm NH_3 in the stripped sour water. With these levels, the stripped sour water is an ideal candidate for recycle/reuse in the refinery. Strippers that use direct steam injection as the stripping medium create more wastewater in the refinery compared to strippers that use reboilers to inject heat into the strippers. Figure 3 shows the configuration of a typical sour water stripper.

In this system, all the sour water produced in the refinery is flashed in a drum and any separated oil is sent to refinery slops. The vapours from this drum are sent to the flare. The sour water from the drum is then sent to a storage tank which provides the required surge in the system. The sour water is then passed through a feed/bottoms exchanger where it is heated up and then sent to the stripper. Steam is used in the reboiler to heat up the bottoms and provide the vapour traffic in the tower. The separated vapors containing H_2S and NH_3 are typically sent to a sulphur plant. The stripped water is routed via the feed/bottoms exchanger and a trim cooler for reuse in the refinery. Any excess water that cannot be reused would be sent to a wastewater treatment plant.

Refineries that include process units such as catalytic crackers and delayed cokers produce more sour water than a less complex refinery. The sour water from these sources also contains phenols and cyanides, and should be segregated from the remaining sour water produced in the refinery. Dedicated sour water strippers may be used to process this water, and the stripped sour water from this stripper should be preferentially reused as wash water for the desalters. This will result in the extraction of a substantial portion (up to 90%) of the phenol contained in this sour water and result in a lowering of the load of phenol to the wastewater treatment system.

Figure 3 *Sour water stripper configuration*

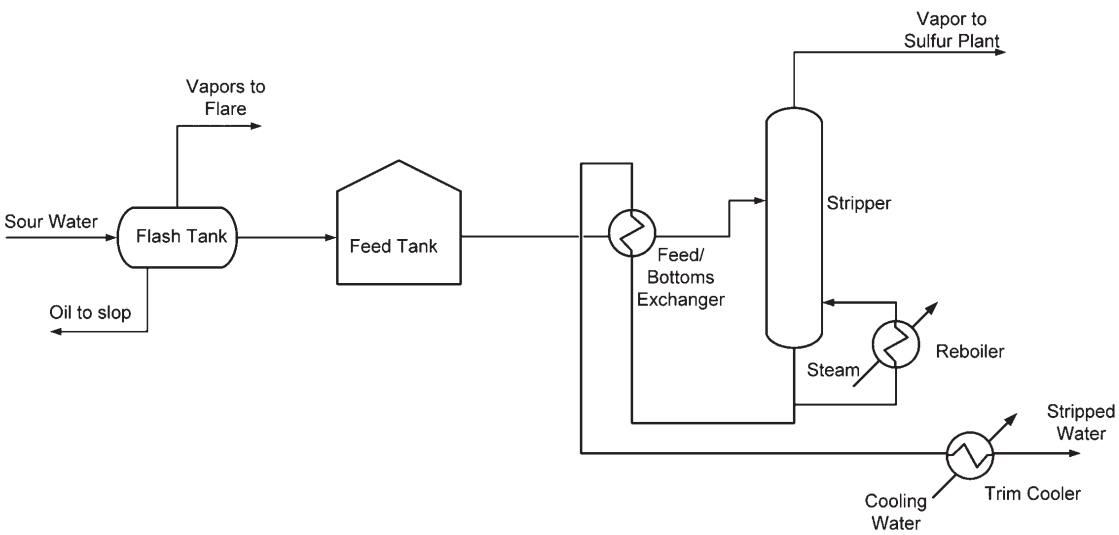

Table 5 *Sour water producers*

Unit	Producer	Typical destination	Comments
Crude	Atmospheric tower overhead drum	Sour water stripper or desalter	Some refineries use this stream as desalter wash water without stripping. This practice can lead to emulsion formation resulting in reduced oil/water separation in the desalter
Vacuum	Tower hotwell	Sour water stripper or desalter	Some refineries use this stream as desalter wash water without stripping. This practice can lead to emulsion formation resulting in reduced oil/water separation in the desalter
Catalytic cracker	Fractionator overhead drum	Sour water stripper	This sour water contains elevated levels of phenol and cyanides which do not get removed in the sour water strippers
Delayed coker	Fractionator overhead drum and blowdown drum	Sour water stripper	This sour water contains elevated levels of phenol and cyanides which do not get removed in the sour water strippers
Visbreaker	Fractionator overhead drum and blowdown drum	Sour water stripper	This sour water contains elevated levels of phenol and cyanides which do not get removed in the sour water strippers
Hydrotreaters	Wash water separator	Sour water stripper	Stripped water is generally used as wash water and therefore hydrotreaters are typically not net producers of sour water
Hydrocracker	Wash water separator	Dedicated sour water stripper	Hydrocrackers generally require very clean wash water and one strategy is to send sour water to a dedicated sour water strippers to avoid impurities that might be present in sour water produced in other units in the refinery
Sulphur plant	Tail gas treater	Sour water stripper	none

Table 6 *Stripped sour water contaminants*

Contaminant	Expected concentration (mg/l)
Chemical oxygen demand (COD)	600 to 1200
Free hydrocarbons	< 10
Suspended solids	< 10
Phenol	Up to 200
Benzene	0
Sulphides	< 10
Ammonia	< 100

Table 5 (above) shows the various process units that produce sour water and best practices with respect to reuse of stripped sour water.

The composition of the stripped sour water is highly dependent on the design and operation of the sour water stripper. Table 6 (left) shows the expected level of contaminants in stripped sour water.

Sour water stripper—summary of best practices

- Route sour water produced in the refinery to the sour water stripper except where it can be used directly, e.g. as desalter wash water (see below).
- If the refinery has a catalytic cracker or a coker, the sour water produced in these units should be segregated and processed in a dedicated phenolic sour water stripper.
- The stripped water from the phenolic stripper should be preferentially used as wash water in the desalter.
- Where necessary, the stripped sour water should be cooled prior to discharge to wastewater treatment, to avoid subjecting the biological treatment system to excessive temperatures.

Tank bottom draws

Typically, the categories of tanks that may require water draws in refineries include:

- crude tanks;
- gasoline tanks; and
- slop tanks.

The incoming crude to refineries normally contains water and sediments (mud) that are picked up when the oil is extracted from the wells—this is referred to as bottom sediment and water (BS&W). When the crude is stored in large tanks, the BS&W settles to the bottom and must be periodically removed to prevent a buildup of this material which would otherwise result in a loss of storage capacity. Water draws are normally sent to either the wastewater treatment or to a separate tank where the solids are separated from the oil and water. Figure 4 shows a typical arrangement of a crude tank draw.

In this system, the crude tank, which is located inside a berm for secondary containment, is equipped with a valved drain line that is sent to a sump located outside the berm. The operator uses the valve to drain the BS&W periodically using the interface level indicator to ensure that hydrocarbons do not get inadvertently drained out. Many refineries make it an operating practice that the operator be present to monitor the draining operation during the entire draining period to ensure that free hydrocarbons are not inadvertently drained. There can be many variations of the system shown in this example but the principle of operation would be similar. The type of interface indicator used is also an important consideration. Some crude tanks use probes, which use high frequency electromagnetic measurement to detect the interface.

Tanks that store gasoline also tend to collect water. These tanks should be equipped with drainage systems similar to that of crude tanks to ensure that the hydrocarbon product is not inadvertently drained from the tanks. It should be noted that the amount of water that is drained from gasoline tanks is relatively small compared to the amount of water from crude tanks.

Figure 4 *Crude tank water draw*

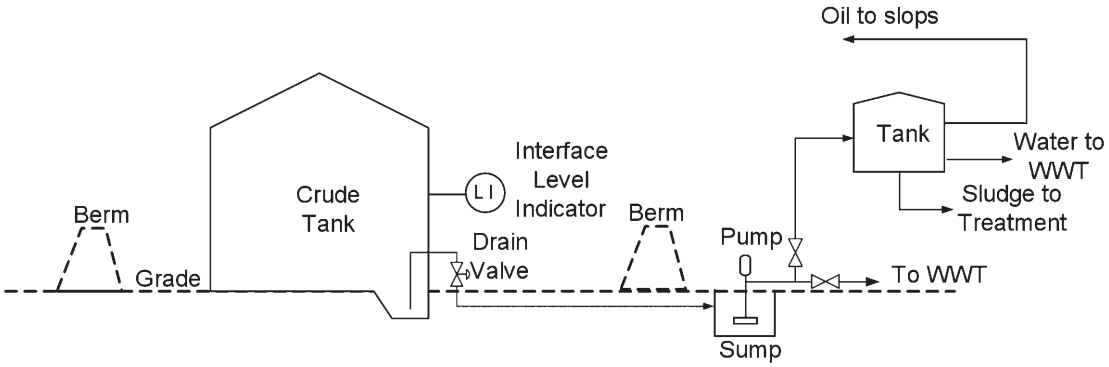

Table 7 *Crude tank bottom sediment and water contaminants*

Contaminant	Expected concentration (mg/l)
Chemical oxygen demand (COD)	400 to 1000
Free hydrocarbons	Up to 1000
Suspended solids	Up to 500
Sulphides	Up to 100

Table 7 shows the expected level of contaminants in typical crude tank BS&W.

Tank bottom draws—summary of best practices

- Adequate piping and valves should be provided to allow proper draining of the tank.
- Proper instrumentation should be provided so that the oil/water interface in the tank can be monitored properly.
- Operating procedures that require the presence of an operator at the tank during the entire draining period should be implemented if practices and automation still results in excessive oil to the sewer.

Spent caustic

Spent caustic is formed due to the extraction of acidic components from hydrocarbon streams. This includes residual H_2S, phenols, organic acids, hydrogen cyanide and carbon dioxide. These acidic compounds are absorbed into the reagent, and the resulting spent caustic solution cannot be regenerated. As a result, these absorbed acidic compounds contained in the caustic solution must be purged intermittently or continuously from the caustic treating system, and replaced by fresh caustic. The caustic solution will drop out as separate aqueous phase in intermediate or product storage tanks. Subsequent drawdown and discharge from the tanks will be required. This discharge usually occurs to the sewer, frequently on a batch basis and can cause problems in the wastewater treatment plant.

The intermediate/product streams most frequently treated with caustic in a refinery are shown in Table 8.

If a refinery is running a particularly corrosive crude, e.g. one with a high TAN (total acid number), the naphthenic acid that is contained in such a crude tends to concentrate in the kerosene/jet fuel cut in the refinery. When this stream is caustic treated the acids are converted to naphthenates which are especially refractory to biological treatment.

Traditionally, spent caustic has been disposed of in a number of different ways. Discharge to the sewer system is common but not necessarily the best practice. An alternative option is off-site disposal of

Table 8 *Intermediate product stream—caustic treated*

Intermediate product	Usual contaminants/impurities				
	H_2S	RSH	Phenol	HCN	Other
Straight run LPG	X	X			X
Light straight-run naphtha		X			X
FCC* C3 + C4 LPG (produces phenolic spent caustic)	X	X	X	X	X
FCC* gasoline (produces phenolic spent caustic)		X	X	X	
Coker C3 + C4 LPG (produces phenolic spent caustic	X	X	X	X	X
Kerosene/jet fuel)	X		X		X

* Fluid catalytic cracker

phenolic spent caustics where recovery of contained organic components can occur. Off-site disposal of sulphidic spent caustics (often the largest portion of refinery spent caustic) is more difficult because there are few reprocessing options for this stream.

There are two strategies for dealing with spent caustic in refineries: in-process abatement and end-of-pipe treatment.

In-process abatement/minimization—best practices

The following in-process options have the common objective of minimizing quantities of spent caustic requiring disposal.

- As discussed above, there are two types of spent caustic that are generated in refineries depending on the types of process units present. Some refineries are able to treat the sulphidic spent caustic in the refinery wastewater treatment plant. Phenolic spent caustic is very odorous and therefore cannot be treated in the wastewater treatment plant. Phenolic spent caustic (from catalytic cracker, coker and kerosene/jet fuel treater) should be segregated from the sulphidic spent caustic and stored separately. This will allow the refinery to properly evaluate appropriate strategies for spent caustic disposal.
- The amount of spent caustic generated is dependent on operating procedures in the treating units. These procedures often call for the caustic to be purged when the sodium hydroxide concentration in the solution reaches a certain value. The production of spent caustic can be minimized by exercising tighter control of caustic treating operations by ensuring that the caustic solution is not purged prematurely.
- Hydrocarbons are normally treated in an amine system to absorb the hydrogen sulphide prior to being sent to a caustic treater. The operation of the absorber should be reviewed to maximize its efficiency of absorption so that the amount of hydrogen sulphide reaching the caustic treating system is minimized.
- Consider prewashing (absorbing) hydrocarbons with stripped sour water to reduce the quantity of acidic compounds in these streams prior to them being sent to the caustic treater. This will minimize the amount of acidic compounds requiring removal in the caustic treater, and thus minimize the discharge of spent caustic.
- The strength, purity and composition of caustic required for a given treatment, or generated by a treatment process, vary widely. The quality of caustic will depend on both the product being treated and the type of treatment system being employed. An effective strategy to reduce the use of fresh caustic and minimize the generation of 'end-of-pipe' spent caustics is to carefully match caustic treatment needs with available spent caustics being generated.

End-of-pipe treatment—best practices

The following treatment systems are used in refineries for treating spent caustic.

- Sulphidic spent caustic can be treated in the wastewater treatment plant as long as it is added in a controlled manner. This will prevent shocking the system and will minimize the generation of odours from the system.
- Off-site disposal of phenolic caustic is practiced in many refineries. The cost of disposal together with transportation and potential liability costs need to be taken into account before choosing this option.

End-of-pipe treatment—other options

Other options available for the treatment/disposal of spent caustic are listed below:

- Deep neutralization (lowering the pH to less than 4) which results in the stripping of the H_2S and the separation of phenols is an option for treating phenolic spent caustics. This option requires relatively high capital and operating costs.
- If the spent caustic includes a significant amount of naphthenates (such as spent caustic from kerosene/jet fuel treaters), wet air oxidation of the spent caustic should be considered. In this

system, the spent caustic is oxidized with air at very high temperature and pressure (~700 psi, ~500°F). This type of system is also very high in capital and operating costs.

- The potential for sale of spent caustic to an adjacent industry such as a pulp and paper mill or cement plant should also be explored.

Cooling water

In refineries, crude oil is separated in various fractions based on boiling point. This is accomplished by fractional distillation of the crude oil. The distillation is carried out in distillation columns where the crude is heated up and vapourized in a fuel (fuel oil, natural gas or refinery fuel gas) fired heater. Various fractions are separated by condensing and cooling products that are withdrawn from the tower. From an overall heat balance point of view, the heat that is put into the system by burning fuel and/or the introduction of steam has to be removed or 'rejected'. This is accomplished in various ways, including:

- heat exchange with boiler feedwater to generate steam;
- heat exchange with other process streams;
- rejection of heat using air coolers; and
- rejection of heat to cooling water.

Figure 5 shows a typical distillation system in a refinery. In this system, three types of heat rejection systems are shown. The crude oil is preheated by exchanging with another process stream and fed to a fired heater. The partially vapourized products are sent to the distillation tower where different side streams are withdrawn based on the boiling point range of the product. The side streams are sent to strippers which are also distillation columns where the boiling point range of the product is adjusted further by the addition of steam. The bottoms product from these strippers is cooled and sent to storage. The vapours from these side strippers are sent back to the main tower. The overhead vapours from the main tower are condensed using an air-cooled exchanger, and then further cooled using a cooling water heat exchanger. Three types of heat exchangers are shown in this system:

Figure 5 *Typical distillation system*

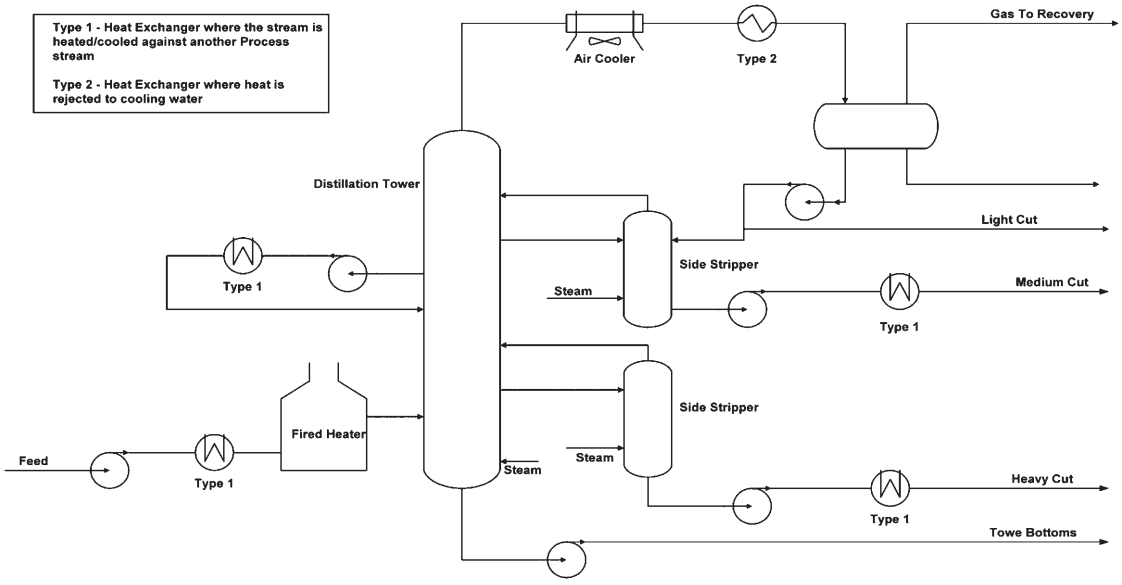

- Type 1 heat exchangers such as steam generators and process stream heat exchangers;
- Type 2 heat exchangers which use cooling water;
- air coolers.

There are three types of cooling water systems:

1. Once-through cooling water system: In this type of system the cooling capacity of the water is used only once without contacting the fluid or vapour being cooled. These systems use water withdrawn from a surface water source such as a lake, river or estuary and typically return the water to the same source. Figure 6 shows a typical once-through cooling water system.

2. Closed-loop cooling water system: In this system water is circulated in a closed-loop piping system and is subject to cooling and heating without evaporation or air contact. Heat that is absorbed by the water in a closed-loop system is normally rejected using a heat exchanger to a once-through cooling system. Figure 7 shows and example of a closed-loop system.

3. Evaporative cooling water system: In this type of system, the heat that is picked up by the recirculating cooling water is rejected in a cooling tower by evaporation. In the cooling tower the hot water is sprayed against a rising stream of atmospheric air. The heat in the cooling water is removed by heating the air as well as evaporation of the cooling water. An example of an evaporative recirculating cooling tower system is shown in Figure 8.

In a cooling tower system, part of the circulating water is removed as blowdown to prevent the build-up of dissolved solids in the system. The quantity of blowdown required depends on the quality of the make-up water, and the number of cycles of concentration that the cooling tower is operated at (typically 4 to 7).

Cooling tower blowdown is typically sent to wastewater treatment in refineries via the sewer. This is because in many cases the pressure on the process side of heat exchangers is higher than the cooling water pressure, and any leaks in a heat exchanger would result in the contamination of the cooling water with hydrocarbons. This practice imposes a hydraulic load on the wastewater treatment system. The full impact on wastewater treatment needs to be evaluated on a case-by-case basis.

Figure 6 *Once-through cooling water system*

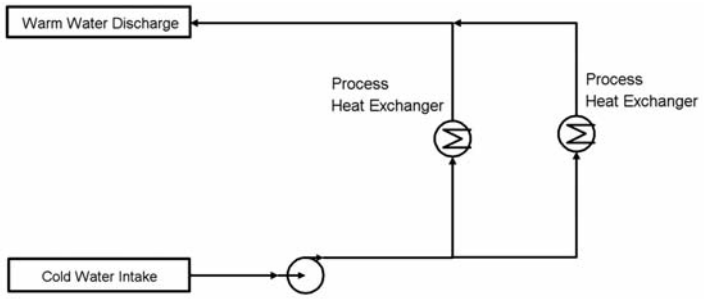

Figure 7 *Closed-loop cooling system*

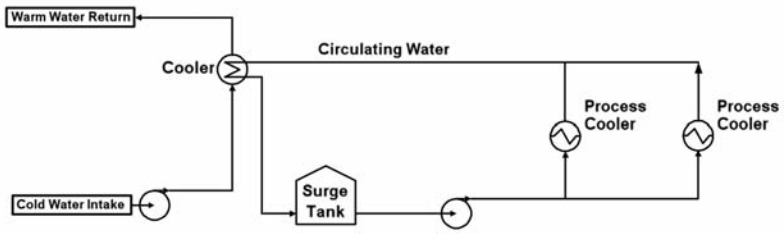

Figure 8 *Evaporative cooling water system*

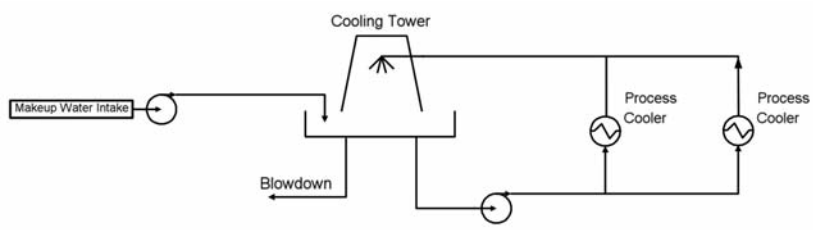

Table 9 *Cooling tower blowdown—contaminants*

Contaminant	Expected concentration (mg/l)
Chemical oxygen demand (COD)	150
Free hydrocarbons	< 5
Suspended solids	Up to 200
Dissolved solids	Up to 700

Table 9 shows the expected level of contaminants in the cooling tower blowdown stream.

Cooling tower blowdown—best practices

- Monitor the cooling tower circulation loop for hydrocarbons.
- If hydrocarbon is detected the source of the leak needs to be determined and isolated quickly.
- Route the cooling tower blowdown to the wastewater treatment plant by a separate line and not through the sewer. This will prevent the blowdown from getting further contaminated with hydrocarbons that may be present in the sewers. However, this is costly, and may not be practicable in all cases. Reduction of oil to the sewer should be regarded as a primary strategy and can accomplish similar results.
- The cooling tower blowdown can be routed directly to the secondary oil/water separation equipment in wastewater treatment (bypassing the primary oil/water separation system).

Condensate blowdown

In a refinery condensate losses are from:

- blowdown from the plant boiler system;
- blowdown from the various steam generators that are located in the process units; and
- unrecovered condensate from steam traps, steam tracing etc.

Boiler blowdown

A portion (usually up to 5%) of the boiler feedwater (BFW) and condensate that is fed to the boilers in the refinery is purged from the system to maintain the dissolved solids level in the system at an acceptable level. This level could be different depending on the pressure level of the steam being produced (150 psi, 600 psi or 1500 psi). Figure 9 shows a typical system.

Steam generator blowdown

A steam generator system is similar to the system shown above but the heat source is a process heat exchanger that needs to reject heat. Figure 10 shows the typical configuration of this system.

Unrecovered condensate

The drivers for condensate recovery in refineries include:

- more energy savings if more condensate is recovered;
- quantity of boiler feedwater makeup required is directly proportional to the quantity of condensate lost; this results in increased operating costs for treating the BFW; and
- any condensate lost to the sewer increases the temperature of the wastewater and thus imposes a heat load at wastewater treatment.

The percentage of condensate recovered can be low in some refineries depending on design and layout of the refinery. Additionally, some of the condensate from steam traps and heat tracing is also lost to the atmosphere and/or sewer. Often these traps are discharged directly to the sewer and the hot discharge can ultimately cause deterioration of the sewers.

Figure 9 *Boiler blowdown—typical*

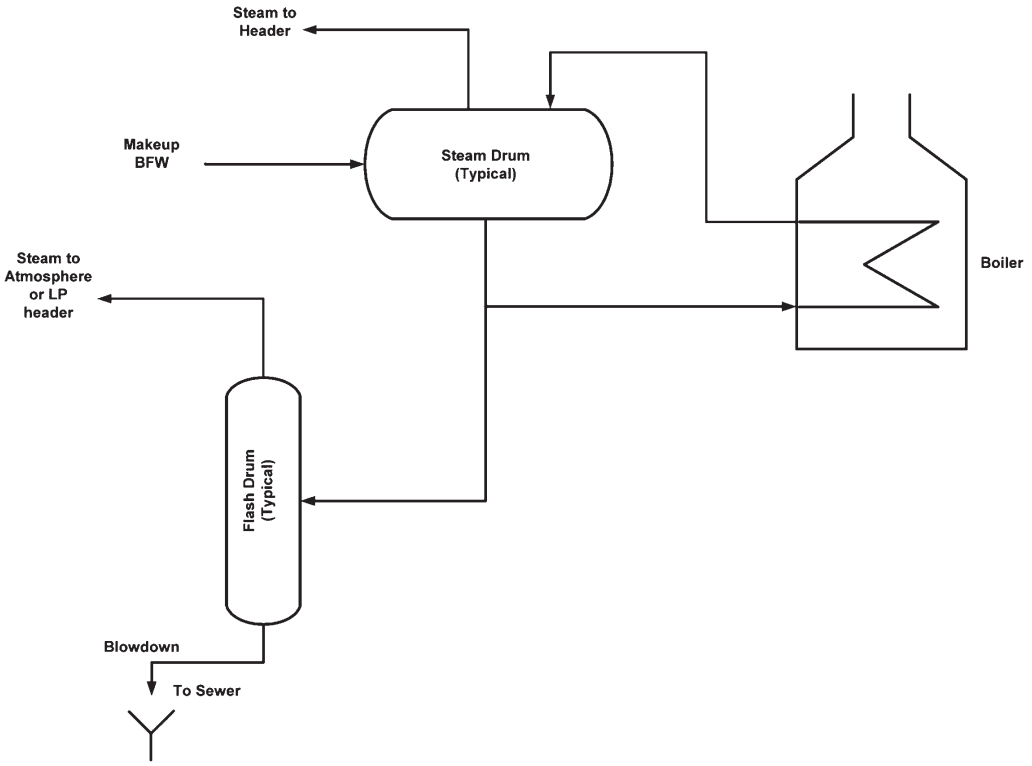

Figure 10 *Steam generator blowdown—typical*

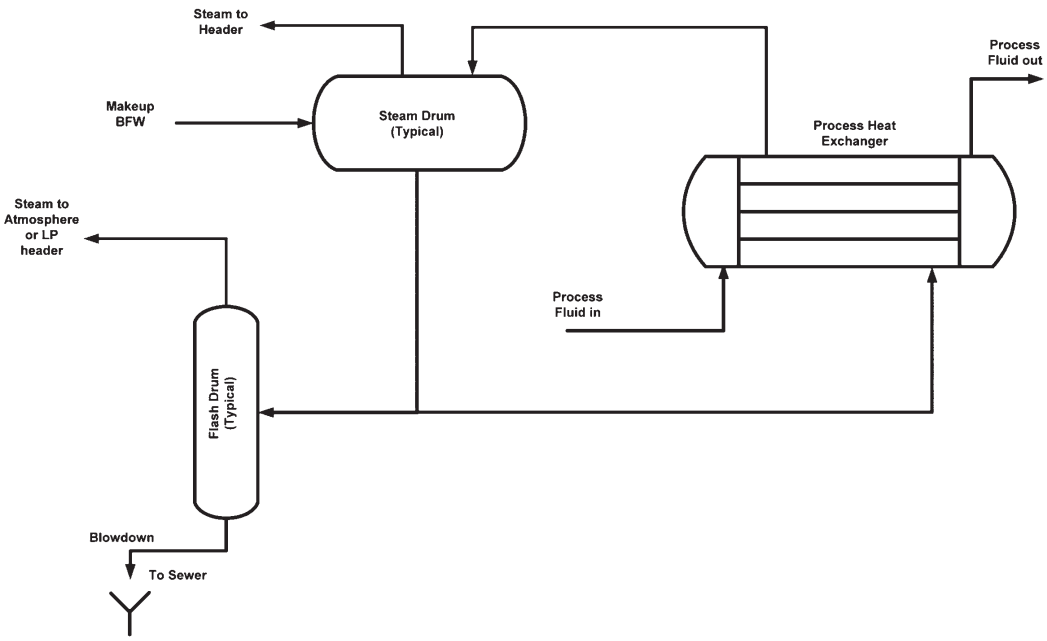

Condensate blowdown—best practices

- The refinery should monitor the condensate balance in the refinery on an ongoing basis and efforts should be made to maximize recovery.
- The total volume of condensate blowdown (boiler, steam generator blowdown and others) should be less than 10% of the total flow of wastewater from the refinery.
- The quantity of blowdown taken at each boiler or steam generator in the refinery should be monitored and minimized.
- The blowdown from each location or a group of locations should be collected and sent to a flash drum (as shown in Figure 10) where the pressure is let down to atmospheric pressure before being discharged. The flashed blowdown should then be cooled with a heat exchanger. This will prevent deterioration of the sewers and also avoid heating and vaporizing of any hydrocarbons that might be present in the sewer. The discharge should not be cooled by directly adding water (such as utility water) because this could require the addition of a substantial quantity of water to adequately cool the stream. This will also result in an increase of the total flow of wastewater to the treatment plant.

Raw water treatment

The raw water treatment in a refinery creates wastewater and sludges that require disposal. The following section describes the best practices with respect to these discharges.

Raw water treatment—best practices

- When lime softening is used for raw water treatment, the sludge generated in this process should be thickened, and optionally dewatered. The thickener overflow water can be discharged directly without any further treatment, when local regulations allow. The sludge that is generated should be disposed off-site. Not discharging it to the sewer in the refinery will prevent the introduction of inert solids into the sewer in the refinery which in turn will avoid creation of more oil sludge that requires disposal.
- The use of ion exchange for treatment of raw water creates an alkaline wastewater stream and an acidic wastewater stream as a result of the regeneration of the ion exchange beds. These streams should be collected in a tank and the pH neutralized prior to being discharged directly to an outfall (bypassing wastewater treatment) if allowed by local regulation.
- The use of reverse osmosis for raw water treatment results in the creation of a reject stream that is very high in dissolved solids. This reject stream should be discharged directly to an outfall (bypassing wastewater treatment) if allowed by local regulation.

Miscellaneous discharges—best practices

There are a variety of additional activities that, if implemented routinely at a facility, could reduce water use. Some of these activities include the following:

- **Housekeeping and washdowns:** If facilities use utility water hoses to washdown the process area and small inadvertent spills of hydrocarbons and other materials, operating procedures and training must be implemented to ensure that hoses are turned off after their use, and that other non-water means (for example, adsorbent pads or booms, brooms) be used to clean up area as appropriate.
- **Closed-loop sample systems:** For sampling hydrocarbons, closed-loop samplers should be installed and used. This will prevent the discharge of hydrocarbons to the sewer during the purging of sample lines.
- **Leak identification programme:** Firewater, or other water leaks in raw water piping or cooling-water piping can add to WWTP flows. These

systems should be periodically monitored for leaks.

Miscellaneous discharges—minimization

Some additional ideas that can contribute to minimization of wastewater discharges to the sewer:

- **External cooling of heat exchangers:** At some locations due to the lack of adequate heat exchanger area or the high cooling water inlet temperature during the summer months, utility water hoses are used to cool these exchangers externally. This results in the discharge of substantial quantities of clean water to the sewer. This practice should be discontinued and the lack of adequate heat exchanger area should be addressed as soon as practical.
- **Fire water system:** Some refineries use treated wastewater in their firewater system. Implementation of this practice should be explored since it will not only minimize the discharge to the sewer but also result in savings of raw water.

Laboratory wastewater

Typical refinery laboratories analyse both hydrocarbon and water samples. The wastewater that is generated in these laboratories can be categorized as follows:

- spent/unused hydrocarbon samples;
- spent/unused wastewater samples;
- discharges from sinks in the laboratory; and
- discharges from bottle washing systems in the laboratory.

Spent/unused hydrocarbons samples—best practices

The spent/unused hydrocarbon samples should be disposed of in segregated drums located at convenient locations inside the laboratory. These drums should drain to a slop drum located outside the laboratory building where it will be collected and picked up periodically by a vacuum truck in the refinery and sent to the refinery slop system.

Spent/unused wastewater samples—best practices

The wastewater samples should be discharged to a local sewer and, if necessary, routed through a local oil/water separator, prior to discharge to the wastewater treatment plant.

Discharges from laboratory sinks—best practices

Discharges from the sinks in the laboratory should be routed to the wastewater treatment plant via a local oil/water separator, in cases where practices to ensure the discharges are oil free are unsuccessful. Care must be taken not to discharge various chemicals or reagents (such as nitro benzene) that could cause problems in the wastewater treatment plant. Chemicals or reagents that could upset a wastewater treatment plant should be managed separately, for example, disposed of in a separate drum and sent off-site for disposal.

Discharges from bottle washing systems—best practices

It must be ensured that sample bottles are emptied to their respective systems (hydrocarbons to slops and wastewater to the sewer) prior to being washed in the bottle washing machines. This will minimize the formation of emulsions in the discharges from these machines. The discharges from the machines should be sent to the local sewer.

Stormwater and sewerage

In this document, stormwater refers to precipitation from rainfall or snowfall. Stormwater from within the refinery process areas is potentially contaminated and typically needs to be treated prior to discharge. Non-process area stormwater may be discharged without prior treatment if allowed by local regulation.

Sewerage refers to wastewater that is discharged from kitchens, employee locker rooms and washrooms.

Stormwater segregation and management

A variety of stormwater management practices are employed at refineries across the world. The particular approach a refinery adopts towards stormwater management is influenced by the age and condition of the sewer system, the frequency and intensity of precipitation, the water quality of process area runoff, the area contained within the process zones and local regulations and requirements.

Segregating non-process area stormwater from process area stormwater allows a refinery to potentially discharge the stormwater from non-process areas without treatment provided it is allowed by local regulation. Effective segregation can be achieved by means of curbing, grading, and proper selection of collection points. Non-process area stormwater is generally clean, and can be reused if it is segregated. A separate sewer or drainage system must be in place to implement this option. Contaminated stormwater must be collected separately and stored until it can be treated in the wastewater treatment plant.

Contaminated stormwater

Process area runoff (contaminated stormwater) can be collected in storage tanks or impoundment basins and discharged for wastewater treatment at a controlled rate. This lowers the hydraulic loading on the treatment plant, and consequently decreases the sizing requirements for individual units in the treatment plant. Equipment sizing of many wastewater treatment units depends on hydraulic load. Biological treatment systems in particular do not respond effectively to sudden changes in flow or contaminant loadings.

The quantity of precipitation depends on rainfall intensity and the drainage area (process area). The drainage area can be directly measured through topological surveys or satellite imagery of the refinery property, taking into consideration the location of drainage points. Rainfall intensity data can be obtained from the local weather service or airport. The required storage volume required for stormwater is governed by local regulations.

Contaminated stormwater—best practices

Techniques that can be used to minimize the quantity of contaminated stormwater include:

- **Minimize process collection area:** Stormwater runoff from process units where they wash out hydrocarbons that have been inadvertently spilled on the pads should be directed to the contaminated stormwater collection system. Process areas where the stormwater cannot potentially come into contact with hydrocarbons or other chemicals can be routed to the non-contaminated stormwater collection system, or discharge it directly if it is allowed by regulation. Curbing or other modifications can be made to reduce the area draining to the contaminated stormwater sewer.
- **Treatment of 'first flush':** 'first flush' of stormwater refers to the stormwater that initially runs off the process area. First flush treatment is based on the assumption that the initial runoff is more contaminated because the hydrocarbons and other pollutants deposited on process areas get washed off by the first flush. The first flush will also contain any oil or solids that were trapped in a catchment area or sewer system. After the first flush is captured, subsequent runoff can then be diverted to the non-contaminated

stormwater system if allowed by local regulation. Even if the stormwater is allowed to be diverted to the non-contaminated system, local regulations typically require that the diverted stormwater be subjected to one stage of oil/water separation just as a precaution. The amount of first flush stormwater collected is the first inch or the first two inches of rain, and is usually governed by local regulations. The first flush is collected in a tank or basin and discharged to wastewater treatment at a controlled rate to avoid overloading the system hydraulically.

- **Minimize solids in stormwater:** Any sand or grit that collects in the process areas gets washed into the sewer with stormwater. These solids will mix with any hydrocarbons present in the sewer and create oily sludge. Typically, one pound of dry solids creates ten pounds of oily sludge and increases the load on the API separator[1] and the sludge treatment system. One of the sources of solids could be the erosion from unpaved areas that make their way into the process units. Paving adjacent areas or covering them with gravel will minimize the migration of sand and grit. Plant areas should be periodically swept and the solids should be collected and disposed of in an appropriate manner. Vegetation can be planted in strategic areas to minimize soil erosion during storm events.
- **Cover process areas:** Covering process equipment (where feasible) reduces the amount of stormwater that comes into contact with potentially contaminated areas. Water flows over the covers and can be directed to the non-contaminated stormwater collection system. Some examples of process areas where covers would be beneficial and practical are pump stations, heat exchangers and separation drums. Areas adjacent to non-contaminated drainage areas are the most logical candidates for covers, as the stormwater from these locations can be diverted directly into the non-contaminated drainage area. This technique would not be practical for large process units, where elevations of various pieces of equipment can vary significantly. A larger area of low-lying process equipment, however, could be covered by a single roof sloped towards a non-contaminated drainage area. In climates where significant snowfalls can be expected, covering for process areas must be designed to account for snow loads and/or must be equipped with measures to prevent freezing of drain lines.

Non-contaminated stormwater

Segregating non-process area stormwater from process area stormwater requires a separate drainage system. This may consist of a buried drainage system, or a system based on grading, trenches and culverts. Curbing may also be necessary to separate process area stormwater from non-process area stormwater. Non-contaminated stormwater can be sent to a pond or lagoon for use as raw water for the refinery.

Non-contaminated stormwater—best practices

- **Re-use:** There are several potential re-use opportunities for non-contaminated stormwater including fire water, cooling tower makeup, utility water and boiler feedwater makeup. These issues are discussed in more detail in the section on *'Re-use of non-contaminated stormwater'* on page 43 of this document.
- **Retention:** Local regulation will dictate the type and frequency of testing that will be required prior to the discharge of non-contaminated stormwater. Many refineries choose to hold the stormwater in a pond or basin prior to discharge. This will also allow time for the refinery to evaluate whether to reuse this water or not.

[1] See page 28 for more information on API separators.

Sewerage management

Sewerage refers to wastewater that is generated in kitchens, locker rooms and washrooms in the refinery. At many locations the sewerage is combined with the wastewater generated in the refinery and sent to the wastewater treatment plant. Other refineries segregate the sewerage and treat it separately from the refinery wastewater.

The strategy for treatment should be dictated by the requirements of the local regulation. Typically the flow of sewerage in a refinery is relatively small when compared to the other wastewater generated in the refinery. If local regulations require that the combined treated wastewater needs to be chlorinated prior to discharge then segregation and separate treatment will result in substantial savings in chlorination costs. Local regulations may dictate additional certification and training for refinery WWTP operators when sanitary waste is comingled with refinery wastewater.

Treatment of sewerage can be effectively carried out in small self-contained packaged treatment systems at relatively small capital and operating costs.

Effluent treatment

This section discusses the various types of treatment that are usually practiced by refineries for treating wastewater. It should be noted that best practices for the various types of treatment are not included in this section. This is because the technology used for refinery wastewater systems is site-specific and depends largely on influent conditions and the level of treatment required which is governed by local regulations.

Typical refinery wastewater treatment plants consist of primary and secondary oil/water separation, followed by biological treatment, and tertiary treatment (if necessary).

A typical refinery wastewater treatment system is shown in Figure 11.

In a refinery wastewater treatment system, two steps of oil removal are typically required to achieve the necessary removal of free oil from the collected wastewater prior to feeding it to a biological system. This oil removal is achieved by using an API separator followed by a dissolved air flotation (DAF) or induced air flotation (IAF) unit.

The wastewater from the secondary oil/water separation unit is sent to the equalization system (the choices for location of the equalization system are discussed on page 31) that is used to dampen out variations in flow and concentration in the refinery wastewater. The wastewater is then routed to the aeration tank/clarifier which constitutes the biological system. The effluent from the clarifier is then sent to tertiary treatment (if necessary) prior to discharge.

Process wastewater pretreatment

In some refineries the wastewater generated from some of the units can be pretreated prior to discharge to wastewater treatment. Some of the practices that are used in refineries are summarised below.

Desalter effluent treatment

The effluent from the desalter can be the cause of operating problems in wastewater treatment. Often, this is the result of changes to crude slates or other desalter upsets that affect the operation of the desalter resulting in inadvertent discharges of oil, emulsion and solids to wastewater treatment. The desalter effluent can also contain significant concentrations of benzene and other volatile organic compounds (VOCs) that tend to vapourize in the sewers leading to excessive emissions as well as odour problems in the refinery if the desalter effluent is not managed properly.

Desalter oil/water separation

Some refineries choose to subject the desalter effluent to an oil/water separation step (possibly using a separation tank) prior to discharge to the

Figure 11 *Typical refinery wastewater treatment*

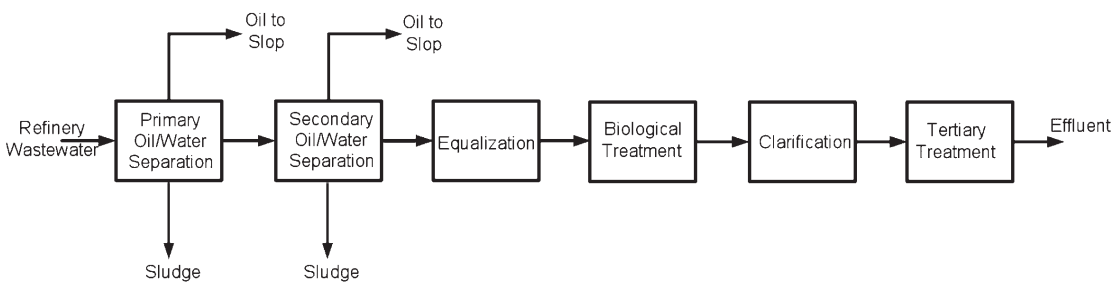

Figure 12 *Desalter oil/water separation*

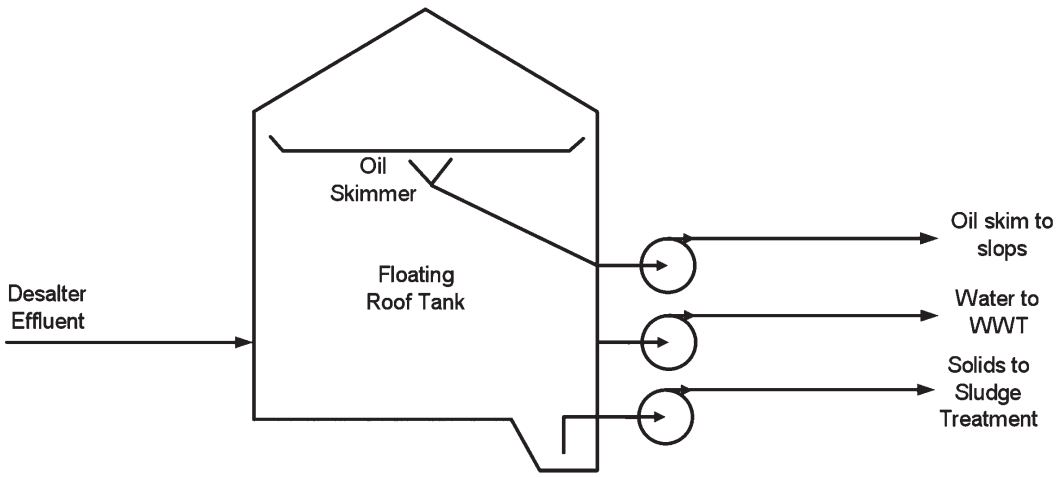

wastewater treatment plant. This approach is used especially when the capacity of a primary oil/water separator in the wastewater treatment is limited, and an analysis indicates that it is more cost-effective to install a separation step on the desalter stream rather than change or upgrade the existing wastewater treatment plant configuration. This is also a way of handling the increased load of solids that get discharged during mud washing of the desalter. Some refineries also use such a tank to divert the brine during upsets in the desalter. Figure 12 shows the configuration of a typical desalter effluent pretreatment system.

The desalter effluent is sent to a floating roof tank (floating roof in order to control VOC emissions) which typically has a residence time of a day or so in order to provide equalization, upset buffering etc. The brine is allowed to settle and separate. The oil is skimmed off and sent to refinery slops and the water

Figure 13 *Desalter effluent stripper*

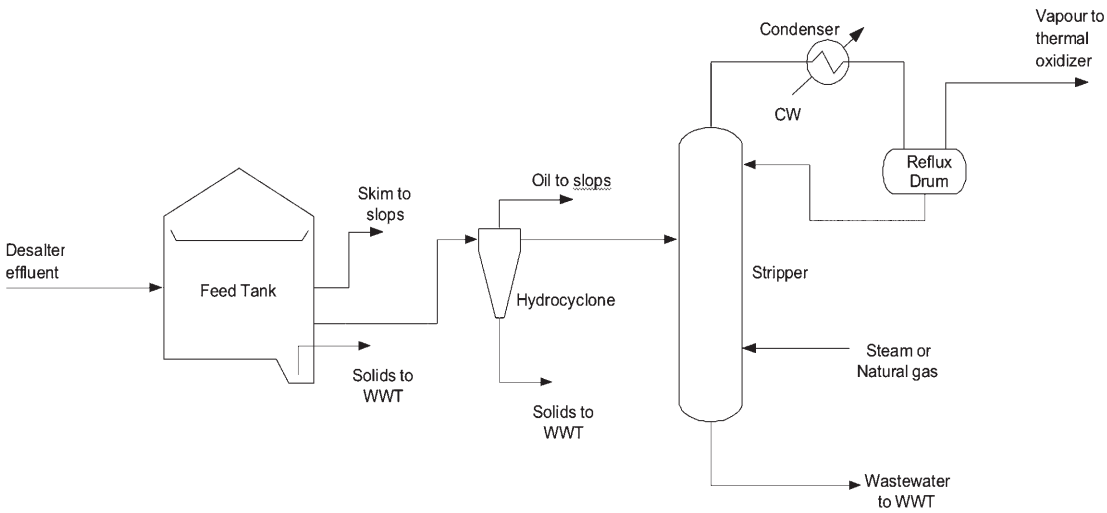

phase is sent to the wastewater plant. The bottom solids from the tank is sent to the sludge treatment plant or the coker unit if the refinery has such a suit.

Desalter effluent VOC control

In some countries emissions of benzene and other volatiles are required to be controlled, by regulation. Since the desalter effluent can contain significant concentrations of these compounds, attempts have been made to control the emissions using strippers (steam/natural gas). The oil and solids content of the desalter effluent are high and this can foul/plug the internals of the stripper if proper pretreatment and equalization are not utilized. Figure 13 shows the configuration of a desalter effluent stripper.

Wastewater segregation

Given that there is a shortage of available raw water in many locations, and the fact that a typical refinery produces anywhere from 10 to 50 gallons of wastewater per barrel of crude processed, the reuse of treated refinery wastewater is increasingly coming into focus. An effective strategy for segregation of refinery wastewater is by the TDS content of the wastewater. As previously discussed the sources of wastewater in a refinery can be categorized as follows:

- desalter effluent (high TDS);
- tank BS&W (high TDS);
- spent caustic (high TDS);
- stripped sour water (low TDS);
- stormwater (low TDS); and
- miscellaneous wastewater (low TDS).

In a segregated system the refinery wastewater system would consist of two parallel trains with the same unit operations, except that the low TDS train would not include an API separator because the suspended solids loading of the inlet wastewater tends to be quite low. Figure 14 describes the two parallel trains.

Figure 14 *Segregated wastewater treatment*

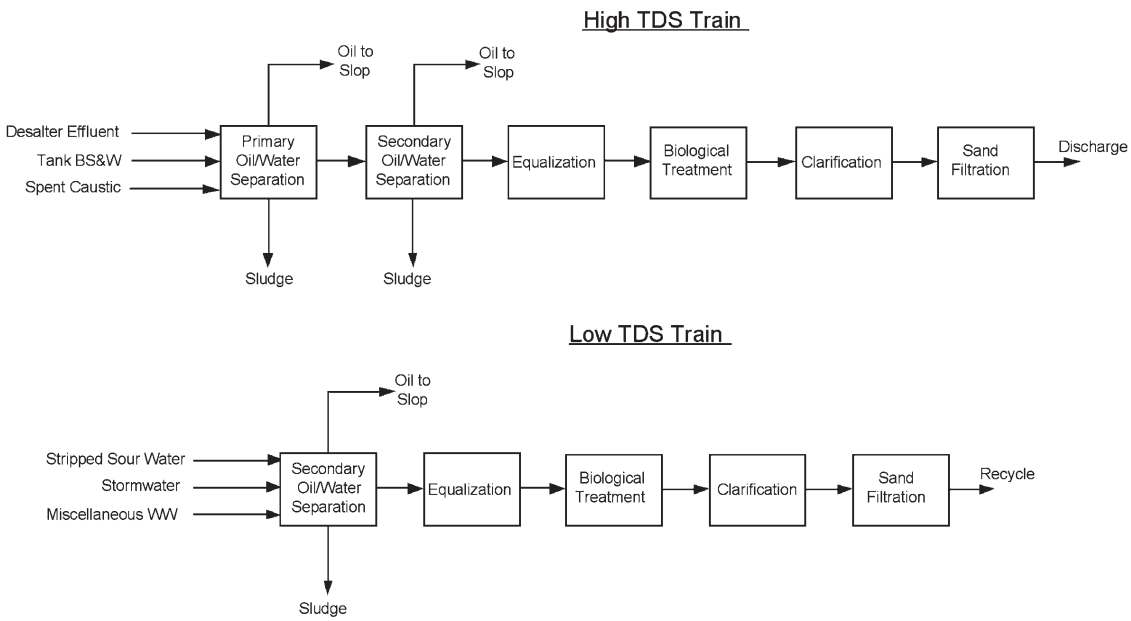

It should be noted that this level of segregation and treatment is not common practice in refineries but is sometimes considered in water-scarce areas. The issues associated with recycle and reuse of treated wastewater are discussed in greater detail in the section on '*Recycle and reuse issues*', beginning on page 42 of this document.

Primary treatment

The primary treatment for refinery wastewater is a physical operation, usually gravity separation, to remove the floating and the settleable materials in the wastewater. In a typical refinery wastewater treatment system, the primary treatment step consists of an oil/water separator where oil, water and solids are separated. This is followed by a secondary oil/water/solids separation step in which a DAF or an IAF unit is used. The primary treatment steps are discussed in detail below.

First stage: separation (oil/water separators, API separators)

API separators are frequently used in the treatment of refinery wastewater which usually contains oil and oil-bearing sludge. Separators use the difference in specific gravity to allow heavier material to settle below lighter liquids. Hydrocarbons that float on the surface are skimmed off, while the sludge that settles to the bottom is removed periodically.

In a typical API separator, wastewater is first collected in a pretreatment section that allows sludge removal. A diffusion barrier slowly allows the wastewater to flow down the separator towards the outlet while the lighter oil fractions can be skimmed off. Flights and scrapers are sometimes used to remove heavier solids. Underflow baffle plates are usually used to prevent oil from escaping into the outlet section. Figure 15 shows a typical API separator.

Figure 15 *API separator*

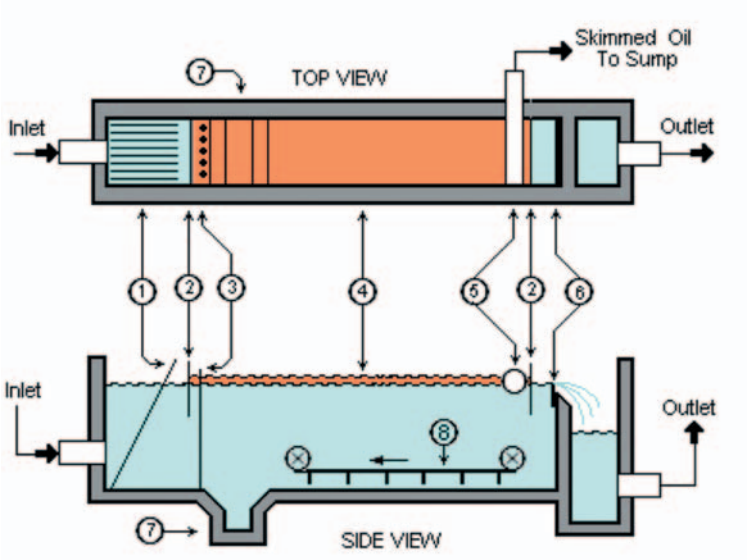

1. Trash trap (inclined rods)
2. Oil retention baffles
3. Flow distributors (vertical rods)
4. Oil layer
5. Slotted pipe skimmer
6. Adjustable overflow weir
7. Sludge sump
8. Chain and flight scraper

(Reproduced courtesy of PSENCO)

Some of the performance-limiting factors relating to the API separators are listed and discussed below:

- Emulsified or dissolved oil that is usually present cannot be removed by an API Separator.
- High pH at the API separators can stabilize emulsions. Spent caustic streams should be either neutralized or routed directly to equalization in order to reduce pH at the API separators.

An API separator is an effective device for separating three phases (oil, solids and water) that are usually present in refinery wastewater. There are some refineries that use corrugated plate interceptors (CPI) or parallel plate separators (PPI). Both CPI and PPI separators tend to be smaller than a comparable API and require less plot space. However, while these devices are very effective as two-phase separators (oil and water), they are less effective when a third phase (solids) are present. The solids that are present in refinery wastewater tend to foul and plug the parallel plates resulting in the need for frequent maintenance.

Secondary oil/water separation

The effluent from the primary oil/water separation step is sent for further oil and fine solids removal to either a DAF unit or an IAF unit. The choice of whether to use a DAF versus an IAF unit is refinery-specific, and needs to be evaluated based on the influent conditions and the required outlet conditions.

Dissolved air flotation (DAF)

The first step in a DAF system is coagulation/flocculation. Dispersed particles (oil/solids) are stabilized by negative electric charges on their surfaces, causing them to repel each other. Since this prevents these charged particles from colliding to form larger masses, called flocs, they do not settle. To assist in the removal of colloidal particles from suspension, chemical coagulation and flocculation are required. These processes, usually done in sequence, are a combination of physical and chemical procedures. Chemicals are mixed with wastewater to promote the aggregation of the suspended solids into particles large enough to settle or be removed.

Figure 16 *Dissolved air flotation—a typical DAF unit*

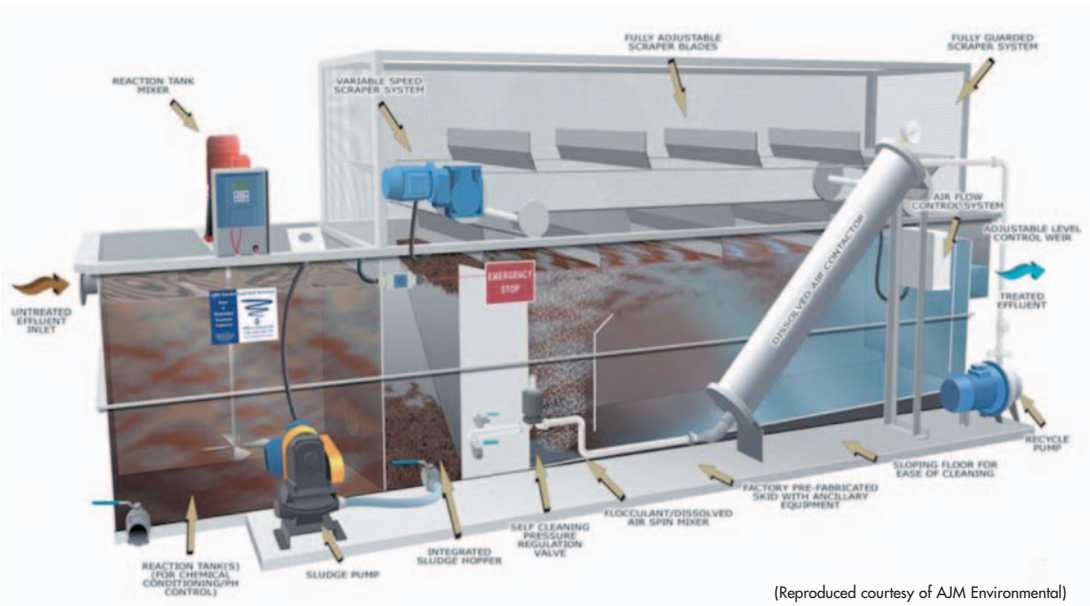

(Reproduced courtesy of AJM Environmental)

In a DAF system, part of the effluent is recycled, pressurized, saturated with air and mixed with the incoming feed. When the recycle stream is depressurized it releases the air bubbles which attach themselves to any free oil/solids contained in the feed and float them to the surface of the vessel. The floated material is skimmed off and sent to refinery slops after further dewatering. Some solids also settle to the bottom of the DAF where they are scraped off and removed periodically. Figure 16 shows a picture of a typical DAF unit.

Induced air flotation (IAF)

In an IAF unit, air is induced by a rotor-disperser mechanism, the spinning rotor acts as a pump and forces the fluid through the disperser openings and creates a vacuum in the stand pipe. The vacuum in the standpipe pulls the air and mixes it with the liquid. The liquid moves through a series of cells before leaving the unit and the float passes over the weir on one or both sides of the unit. The advantages of the IAF technique are compact size, low capital cost and the effective removal of free oil and suspended materials. The configuration of a typical IAF unit is shown in the Figure 17.

Other types of dispersed gas flotation units exist, such as the hydraulic type, where effluent is pumped and educts vapour from the top, before being distributed to each cell via a striker plate to create smaller bubbles which again attract and pull oil out of suspension.

Equalization system

The objective of the equalization system is to minimize or reduce the fluctuations caused due to either sudden change of flow or composition in the wastewater treatment plant.

Figure 17 *Induced air flotation (IAF) unit*

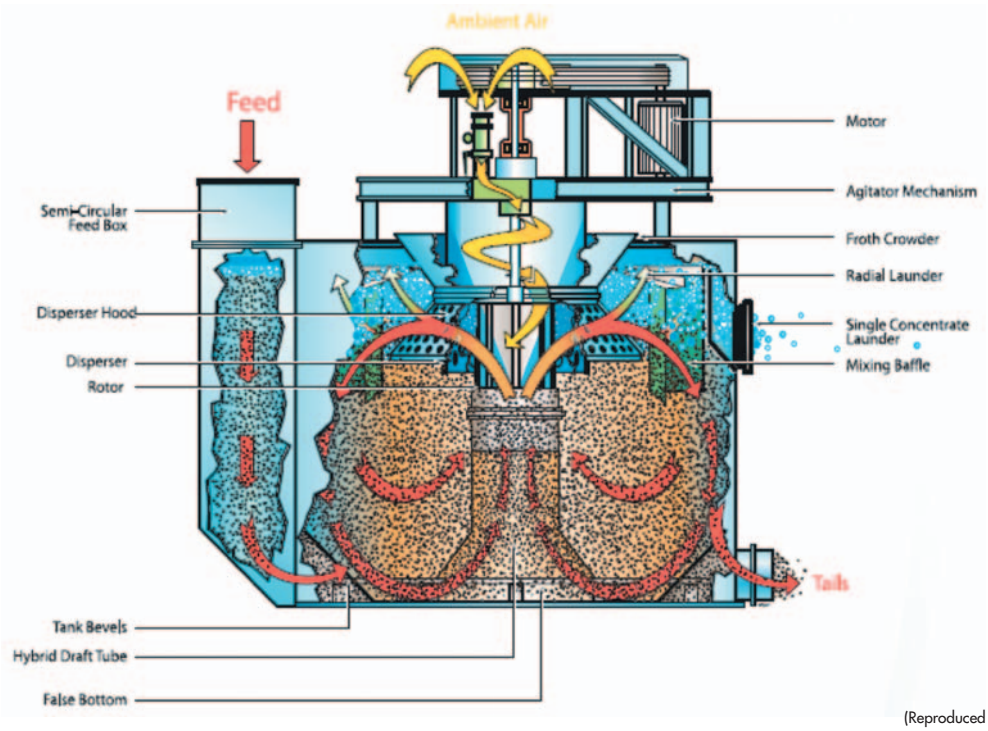

(Reproduced courtesy of WEMCO)

- **Flow equalization:** Flow equalization provides dampening of the flow variations, thereby reducing potential spikes in flow and loads to the downstream units; it also reduces the size of the downstream units and the cost of the overall refinery wastewater system.
- **Concentration equalization:** This system provides dampening of contaminants, thereby preventing the shock loading of the downstream units such as biological systems. In a biologically-based system, performance is limited by the capacity of the microorganisms to adapt to the changing conditions of variation in flow and composition.

Location of the equalization system

In Figure 11, the equalization system is shown *after* the secondary oil/water separation step. Other potential locations for the equalization system are discussed below.

Upstream of the API separator
Some refineries choose to locate the equalization tank upstream of the API separator in order to dampen the variations in flow to the separator. If this location is chosen, it must be recognized that all the oil and solids contained in the refinery wastewater will pass through this tank and some of them will separate. Hardware (piping/pumps and controls) must be provided to allow removal of free oil and solids from the tank in order to avoid accumulation of these materials. Frequent cleaning of this tank (once or twice a year) may also be required depending on the loading of solids and oil that are contained in the refinery wastewater.

Upstream of the DAF/IAF
The equalization tank is installed at this location in order to dampen the flow variations to the DAF/IAF and downstream equipment. While this will tend to make all the downstream equipment smaller, any oil that is present in the effluent from the API separator will accumulate in this tank if it is not removed periodically.

Downstream of the DAF/IAF
The primary goal of installing the equalization tank at this location is to protect the downstream equipment (biological system) from wide variations in flow and concentration.

Secondary treatment

Biological treatment is the most widely used wastewater treatment technology for removal of dissolved organic compounds in the oil refining industry.

In general, biological treatment can be classified into two categories:
- suspended growth processes; and
- attached growth processes.

Suspended growth processes

Suspended growth processes are biological treatment processes in which the microorganisms are thoroughly mixed with the organics in the liquid, and maintained as a suspension in the liquid. Microorganisms use organic constituents as food for their growth and clump together to form the active biomass. The most commonly practiced suspended growth process used in the treatment of refinery wastewater is the 'activated sludge process' (discussed below).

Activated sludge
An activated sludge process is the most effective of all the biological systems available. It is used in many refineries around the world and offers a reliable method of biological treatment.

Activated sludge is a continuous suspension of aerobic biological growths in a wastewater containing entrapped suspended colloidal, dissolved organic and inorganic materials. The microorganisms use the organic material as a carbon source and energy for the microbial growth, and convert the food into cell tissue, water and oxidized products (mainly CO_2).

Figure 18 *Activated sludge system*

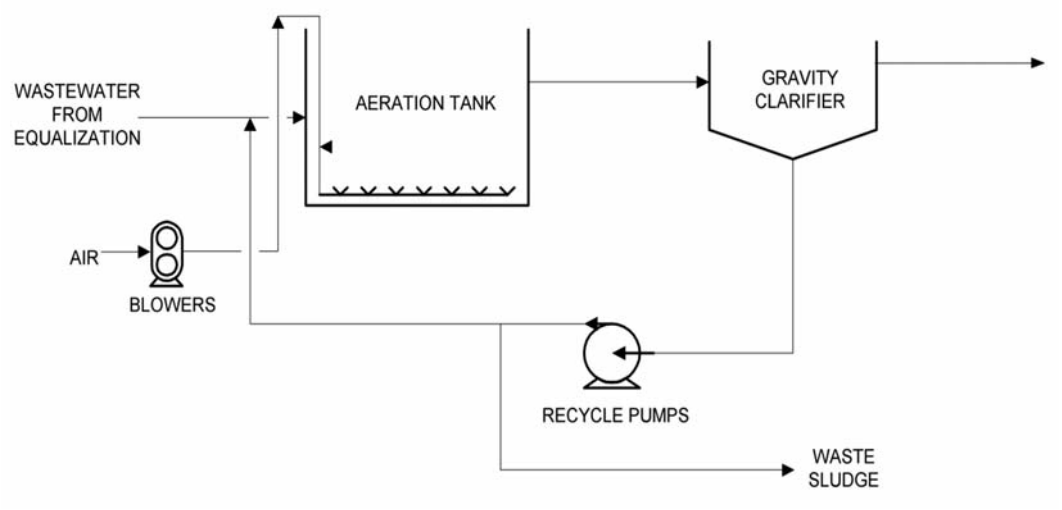

In an activated sludge process, the wastewater enters an aeration tank where the microorganisms are brought in contact with organic contaminants of the wastewater. Air is continuously injected into the system to keep the sludge aerobic and to maintain the solids in suspension. The mixture of wastewater and sludge in the aeration basin/tank is referred to as the 'mixed liquor', and the biomass in the mixed liquor is referred to as 'mixed liquor suspended solids' (MLSS). The organic portion of the biomass is generally referred to as the 'mixed liquor volatile suspended solids' (MLVSS). In a typical refinery wastewater treatment system, the MLSS are composed of 70–90% active MLVSS and 10–30% inert solids.

A schematic of a typical activated sludge system is shown in Figure 18. The incoming wastewater enters the aeration tank where it is contacted with microorganisms and air. The effluent from the aeration tank is sent to the clarifier. The organic contaminant in the wastewater gets converted into the biomass and gets separated later in the clarifier. A portion of the concentrated sludge, referred to as 'return activated sludge' (RAS), from the clarifier is recycled back and mixed with incoming wastewater, and the remainder of the sludge is discharged as 'waste activated sludge' (WAS).

Activated sludge treatment with powdered activated carbon (PACT®)

The PACT® (Powdered Activated Carbon Treatment) system is similar to the conventional activated sludge system described above. In this treatment system both biological oxidation and carbon absorption occur simultaneously, thus enhancing the removal of contaminants in the wastewater. Most of the powdered activated carbon is recycled with the activated sludge, but the system requires a continuous makeup of fresh carbon. PACT® systems are generally used for refinery wastewater in those cases where stringent standards need to be met for certain contaminants.

A schematic of a typical PACT® system is shown in Figure 19.

Figure 19 *The PACT® (Powdered Activated Carbon Treatment) system*

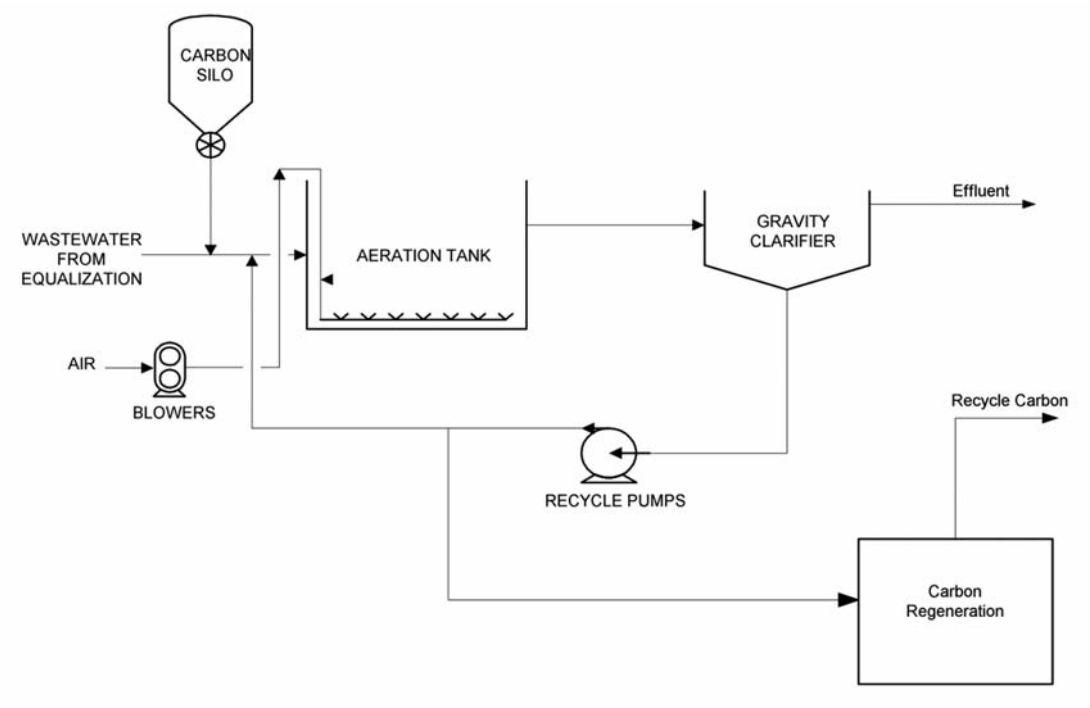

Sequencing batch reactor

A sequencing batch reactor (SBR) is a fill-and-draw semi-batch biological treatment alternative that employs aeration, sedimentation and clarification in a single reactor. The unit processes of aeration and sedimentation are common to both the SBR and activated sludge systems. In activated sludge systems the unit operations take place in different basins, while in the SBR the operations take place in a sequential order in a common basin.

Although still practiced in some refineries, SBR technology is increasingly uncommon and has limited application in refinery wastewater treatment. Figure 20 (overleaf) shows a typical SBR system.

The various steps of operation are described below:

- **Fill:** During the fill operation, wastewater with the substrate is added to the reactor. The aeration system is not operated as the reactor is charged with wastewater from the equalization tank.
- **React:** During this step, wastewater is aerated in the same way as in the activated sludge system. Biological activity is initiated in this cycle of operation.
- **Settle:** In this step, aeration is terminated and MLSS is allowed to settle. The settling is accomplished under quiescent conditions; no flow enters, or is withdrawn from the reactor during the settle period.
- **Decant:** During the decant period, clarified or treated supernatant effluent is withdrawn from the upper portion of the reactor. The sludge blanket at the bottom of the reactor is maintained so that it is available as seed sludge for the next cycle.
- **Idle:** This is not a necessary step and is usually omitted for the refinery wastewater treatment system. The idle period is the time between the draw and the fill; it could be zero or could be days. Generally, it is used in multi-tank systems, thereby providing time to one reactor to complete its fill phase before switching to another unit.

Figure 20 *Sequencing batch reactor system*

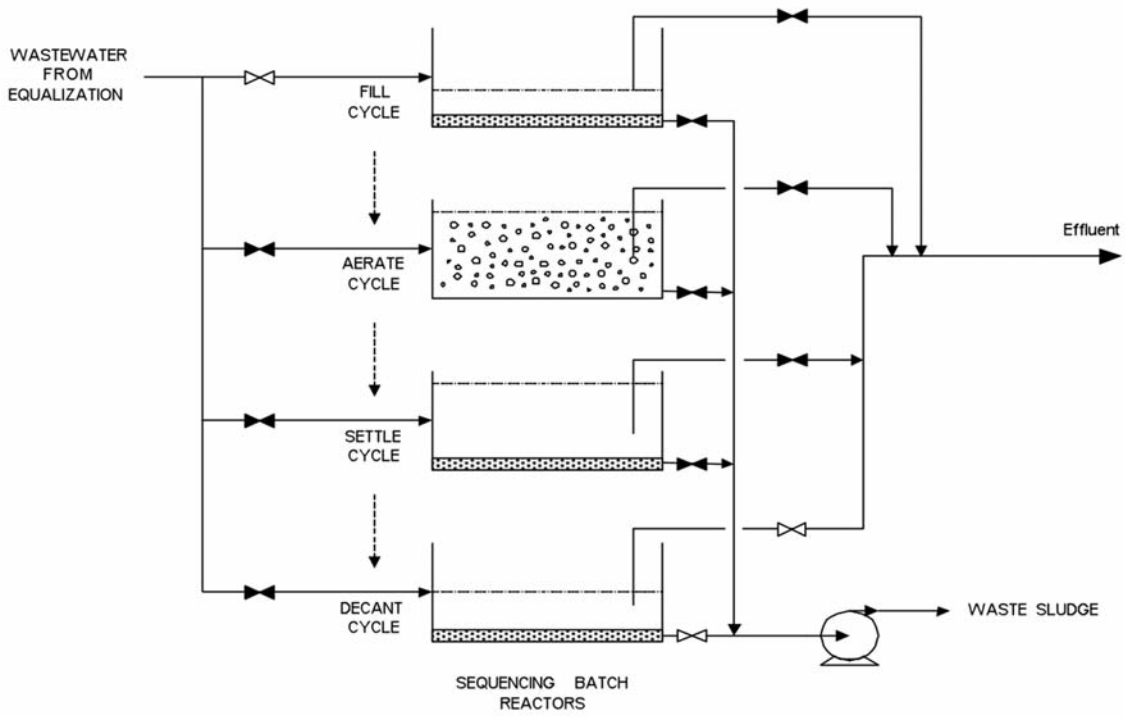

Membrane bioreactor technology

Membrane bioreactors (MBRs) are suspended-growth biological treatment processes and are a variation on the activated sludge system. A membrane bioreactor combines a membrane process (e.g. microfiltration) with a suspended growth bioreactor, thereby eliminating the secondary clarification used in an activated sludge system. A schematic of a typical MBR system is shown in Figure 21.

Figure 21 *Membrane bioreactor system*

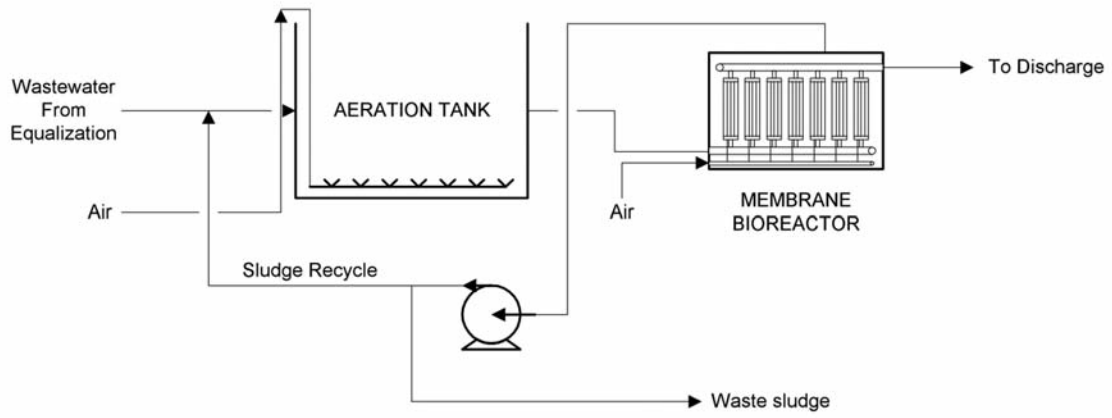

The micro-filtration membranes are located in a steel membrane tank and are subjected to a low-pressure vacuum that pulls water through the membranes and pumps the filtered water to the next process step while retaining solids in the reactor. Compressed air is injected into the system to scour the exterior of the membranes. The MBR system usually operates at higher MLSS concentrations (15,000–20,000 mg/l) than conventional activated sludge systems. MBR systems are not used in refining due to increased cost compared to conventional activated sludge, however for activated sludge systems that require tertiary filtration, MBR is more cost competitive, since it is equivalent to having an effluent filter. For applications where further tertiary treatment such as reverse osmosis will be used, MBR can be attractive versus the alternative option of using media filtration and microfiltration after biological treatment (see page 47).

Aerated lagoons

In this type of system, wastewater is treated in an earthen in-ground basin that is used for both the aeration and the settling functions. Air is injected through mechanical or diffused aeration units into the lagoon to promote biological treatment. There are usually two types of aerated lagoons:

- **Aerobic lagoons:** In aerobic lagoons, dissolved oxygen is maintained throughout the basins. For this type of a system, settling can take place at a part of the pond separated by baffles or separate sludge settling and disposal facilities might be required. The settled sludge is removed periodically.
- **Aerobic-anaerobic/facultative lagoons:** In these types of lagoons, oxygen is maintained in the upper layer of the liquid in the basin and the rest of the lagoon remains anaerobic. A portion of suspended solids moves to the downstream part of the lagoon where settling takes place and undergoes anaerobic decomposition.

Figure 22 shows a typical lagoon treatment system.

Figure 22 *Aerated lagoon system*

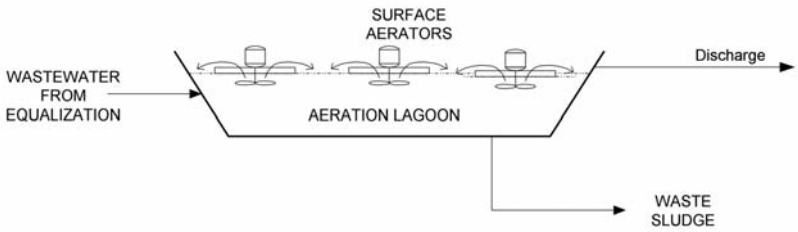

Aerated lagoons usually require much larger plot areas than other treatment methods, and are commonly employed where land area is not expensive or when discharge standards are not overly restrictive. With the current stringent effluent standards faced by the petroleum industry, aerated lagoons are used less frequently for wastewater treatment in refineries because they cannot produce comparable effluent quality to activated sludge systems.

Attached growth processes

In attached growth processes, microorganisms are attached to an inert packing material instead of being suspended in the liquid as in suspended growth processes. The packing used in the attached growth processes can be rocks, gravel, plastic material and various synthetic materials. The wastewater comes in contact with the microorganisms that are attached to the media and are converted to more biomass and CO_2. The film of biomass on the media keeps growing and ultimately sloughs off when it reaches a certain thickness.

Trickling filters

The trickling filter system consists of:

- a bed of packing material such as rock or plastic packing on which the wastewater is distributed continuously;
- an underdrain system to carry the treated water to other units; and
- distributors for distributing the influent wastewater to the surface of the filter bed.

Figure 23 *Trickling filters*

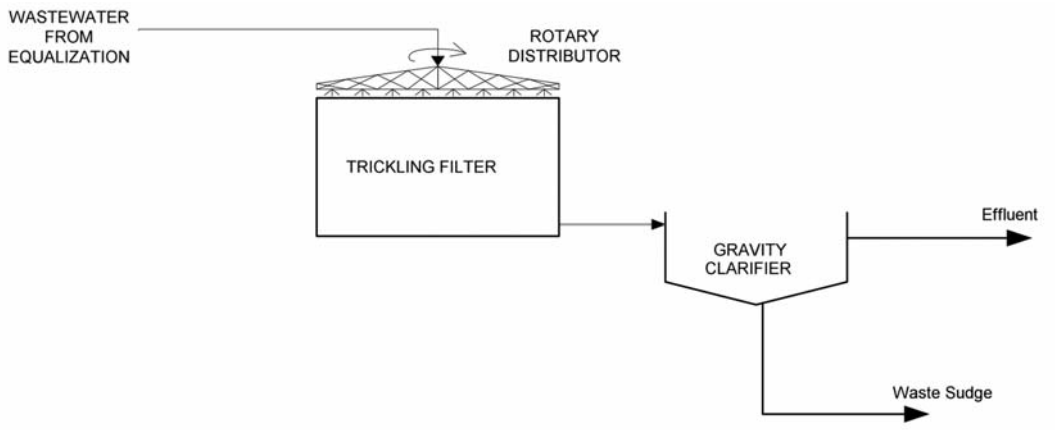

A slime layer (microorganisms) develops on the packing in the trickling filter. As wastewater passes through the trickling filter bed, the microorganisms biodegrade the organics to be removed from the liquid flowing over the packing. A final clarifier, located immediately downstream of the filter, serves to remove microbial growths that periodically slough off from the filter media.

A schematic of a typical trickling filter system is shown in Figure 23.

Rotating biological contactor

The basic element of the rotating biological contactor (RBC) consists of closely spaced plastic discs mounted on a horizontal shaft. The disc material is usually of polystyrene or polyvinyl chloride. These plastic discs are submerged in wastewater and are continuously rotated by the horizontal shaft through an air driven motor. Microorganisms adhere to the plastic surface and form a layer of biological mass (slime) on the discs. Over time, excess sludge is sloughed off the discs.

As the discs are rotating, the attached microorganisms react with the contaminants in the wastewater and convert them to biomass and CO_2.

A schematic of a typical RBC system is shown in Figure 24.

Figure 24 *Rotating biological contactor system*

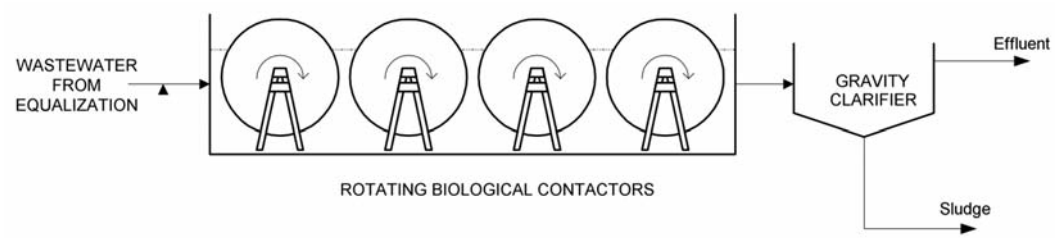

Nitrification, or nitrification with denitrification
In some cases when a refinery site is required to meet tight ammonia or nitrogen limits, the biological treatment system could include either a nitrification (by the use of nitrifying bacteria) or a combined nitrification/denitrification step. The level of nitrogen compounds in refinery wastewater can be controlled by avoiding discharges of spent amines and proper removal of ammonia in the sour water stripper. If the concentration of nitrogen compounds is still too high to meet regulatory limits, then nitrification or nitrification/denitrification should be included in the biological treatment system.

Nitrification is the term used to describe the two-step biological process in which ammonia (NH_4-N) is oxidized to nitrite (NO_2-N) and the nitrite is oxidized to nitrate (NO_3-N). In denitrification, the nitrate is reduced to nitric oxide, nitrous oxide and nitrogen gas. Figure 25 shows the two arrangements that are used in these systems.

In the first system, the aeration/nitrification tank is followed by an anoxic tank where denitrification occurs. A food source (typically methanol) is added to this tank to aid in the process. In the second system, the anoxic tank is followed by the aeration/nitrification tank. In this case, the food source for the anoxic tank is the BOD in the

Figure 25 *Nitrification/denitrification systems*

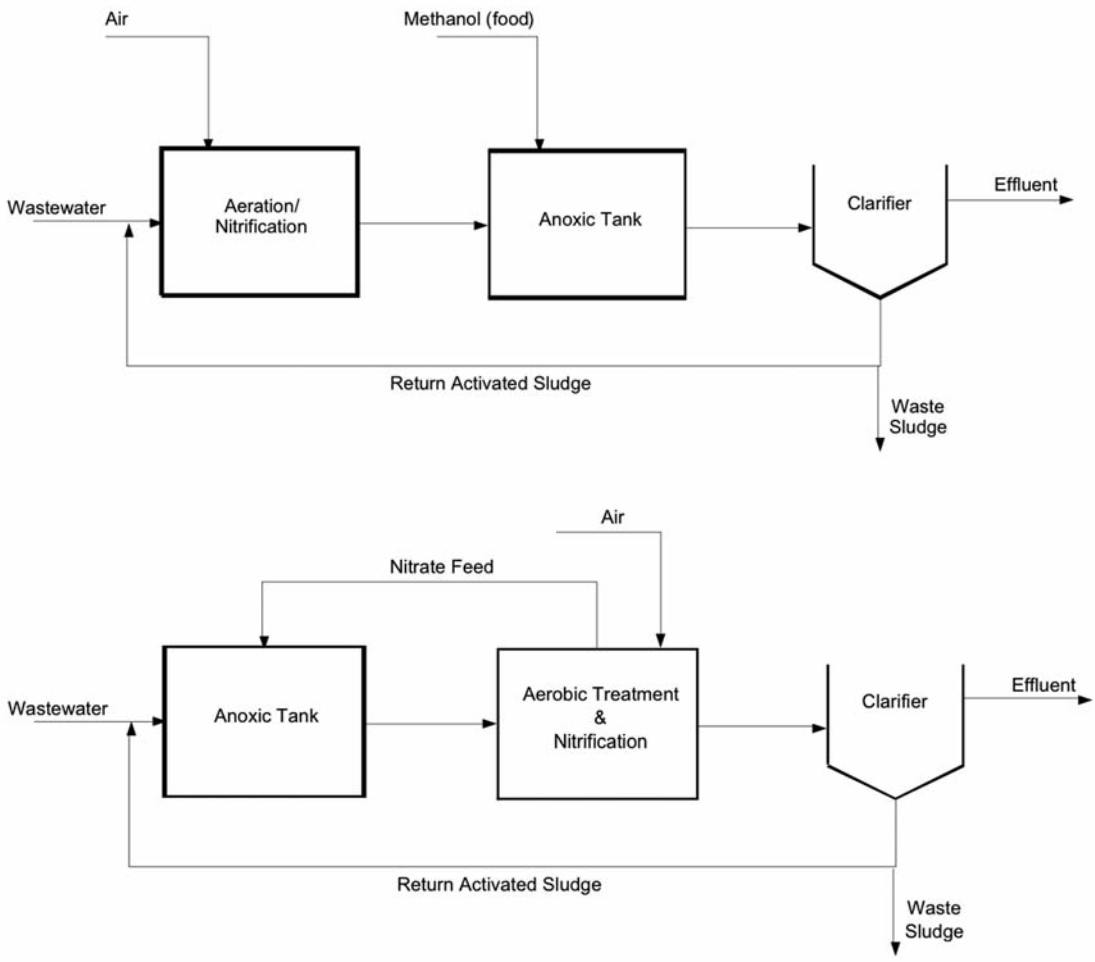

incoming wastewater. A portion of the treated wastewater from the aeration tank is recycled so that the reduction of nitrates in the effluent can occur.

Tertiary treatment

Tertiary treatment needs to be considered if the refinery needs to meet stringent limits for different contaminants such as:

- total suspended solids (TSS);
- chemical oxygen demand (COD);
- dissolved and suspended metals; and
- trace organics such polyaromatic hydrocarbons (PAHs)

Sand filtration

Effluent from the biological treatment system typically contains about 25 to 80 mg/l of suspended solids depending on the operating conditions in the clarifier. Refineries at many locations need to meet limits as low as 15 mg/l on a consistent basis. In these instances, one option is for the effluent from the clarifier to be filtered using sand filters. This process involves passing the wastewater through a filter bed comprised of a filter media. Dual media filters comprise a layer of anthracite over sand. The larger particles are trapped by the anthracite and the finer solids are held up in the sand. Periodically, the forward flow is stopped and the filter is backwashed to remove the trapped solids. Figure 26 shows the typical configuration of a sand filtration system.

Activated carbon

Removal of dissolved organic constituents from the refinery wastewater can be done by carbon adsorption. In general, activated carbon is usually applied as an effluent 'polishing' step (removal of residual organics) for wastewater that has been processed in a biological treatment system. This is because the carbon usage will be prohibitively high if it applied to the refinery wastewater.

In this process the wastewater is passed though a bed of granular activated carbon (GAC) where the organics in the wastewater are adsorbed by the carbon. The carbon bed is periodically regenerated to remove the organics from the exhausted carbon. Figure 27 shows the configuration of a typical carbon adsorption system.

Figure 26 *Sand filtration*

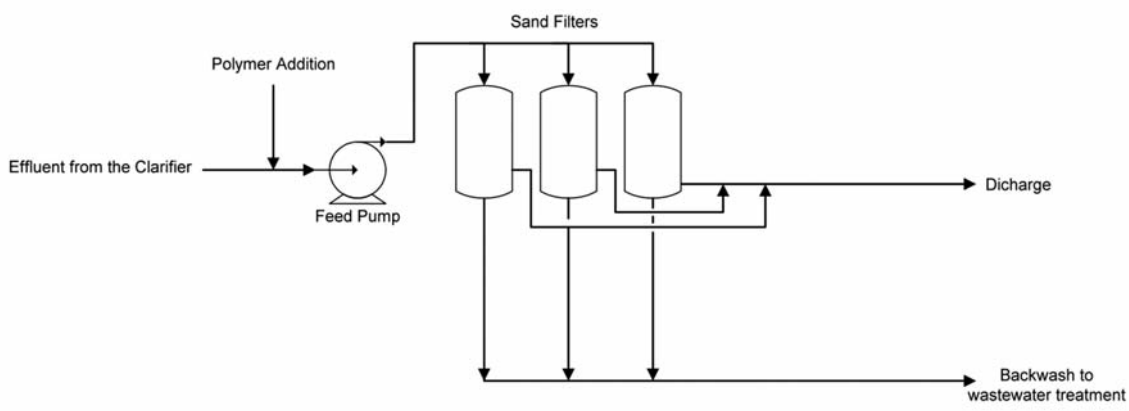

Figure 27 *Activated carbon system*

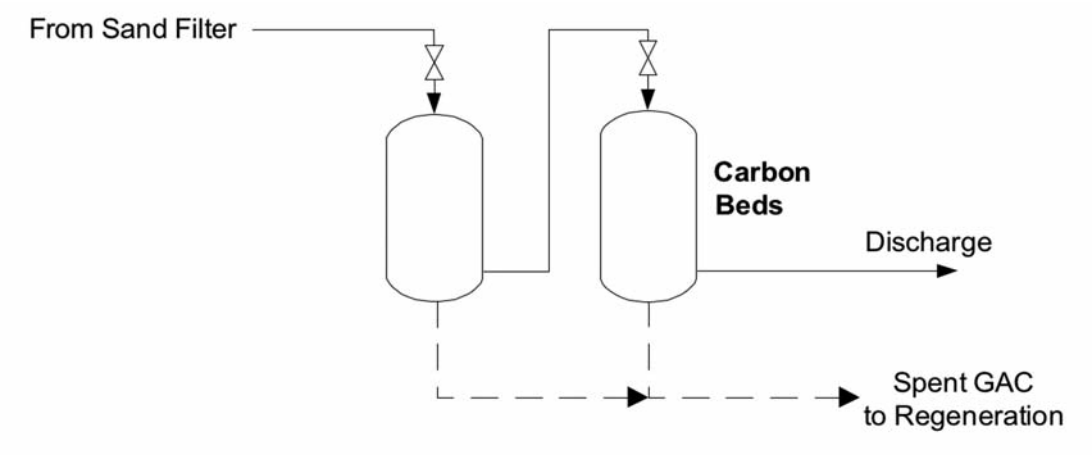

Chemical oxidation

Chemical oxidation in a refinery is generally used for reduction of residual COD, non-biodegradable compounds, and trace organic compounds. It is not common to have a chemical oxidation system in a refinery wastewater treatment plant; details of this approach are included in this document for information purposes.

The following oxidation reagents are generally used in a chemical oxidation system:

- hydrogen peroxide;
- chlorine dioxide; and
- ozone.

Chemical oxidation can be enhanced in some cases by the use of UV light as a catalyst, but this needs to be evaluated on a case-by-case basis.

Figure 28 shows the configuration of a typical chemical oxidation system.

Figure 28 *Chemical oxidation system*

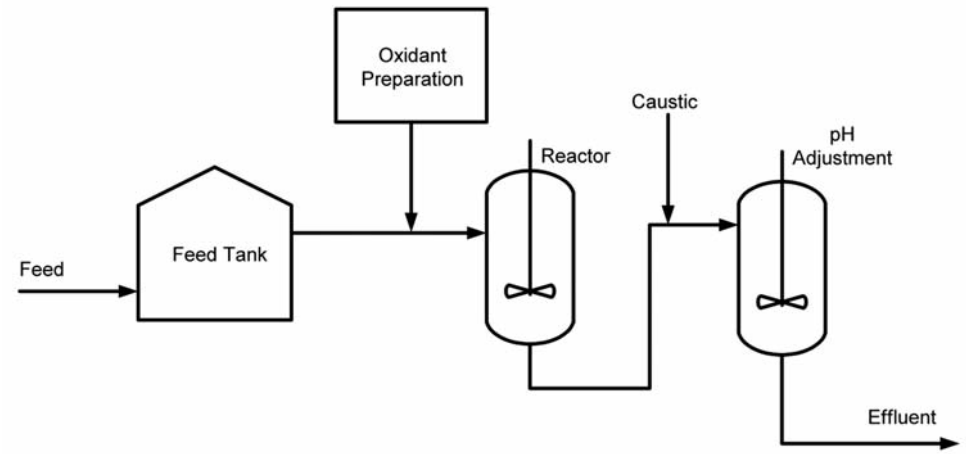

The feed is sent to the oxidation reactor via a feed tank which provides any surge capacity that is required. Chemical oxidant (hydrogen peroxide, ozone or chlorine dioxide) is prepared fresh to maintain reactivity and fed to the reactor. The effluent from the reactor is then sent to another vessel for adjustment of pH if necessary.

Treatment of sludges

In a refinery wastewater treatment plant, sludge is typically produced from the following unit operations:

- API separator—bottom sludge;
- dissolved gas flotation (DGF) and induced gas flotation (IGF) systems—float and bottom sludge;
- biological treatment—waste biological sludge

API separator—bottom sludge

The need for treatment of sludge that is removed from the bottom of the API separator depends on refinery configuration as well as local environmental regulations. This sludge, after further dewatering and de-oiling, can be sent either to off-site disposal or to the coker unit in the refinery (if the refinery has such a process unit). A typical sludge treatment system is shown in Figure 29.

The API sludge is sent to a decanter tank where water and free oil are removed. If the refinery has a coker unit, the sludge from the tank can be sent to this unit if possible. An alternative is to send it to a centrifuge for further separation. The centrate from a centrifuge is sent to refinery slops and the sludge sent to off-site disposal.

DGF/IGF float and sludge

The float from the DGF/IAF typically contains emulsions the chemicals (flocculants and coagulants) that are added to aid the separation and therefore require to be handled separately. Figure 30 (opposite) shows the typical treatment of DGF/IGF float.

The float is sent to a tank where emulsion-breaker chemicals are added (if necessary) and the fluid is recirculated and heated up to break the emulsions. The material in the tank is then sent to disposal.

The sludge from the DGF is normally sent to the same system that treats the API sludge (shown in Figure 29).

Figure 29 *API sludge treatment system*

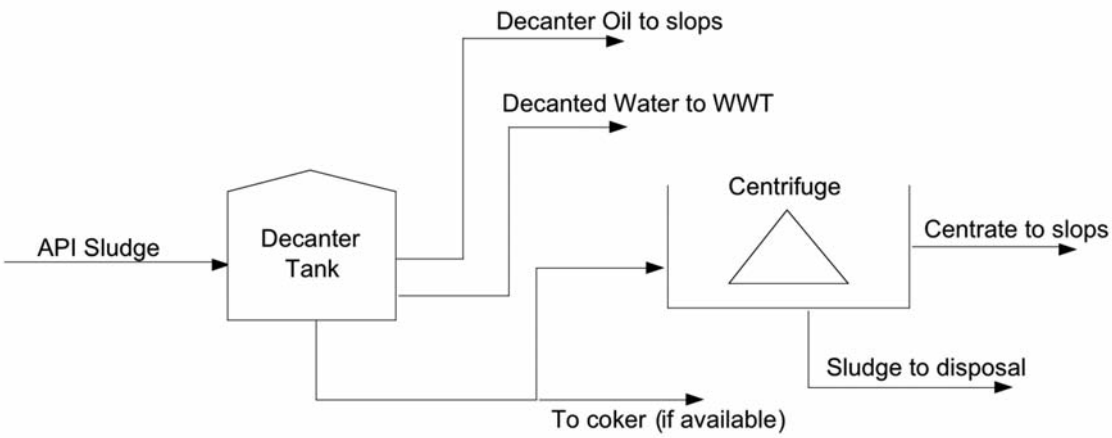

Figure 30 *DGF/IGF float treatment*

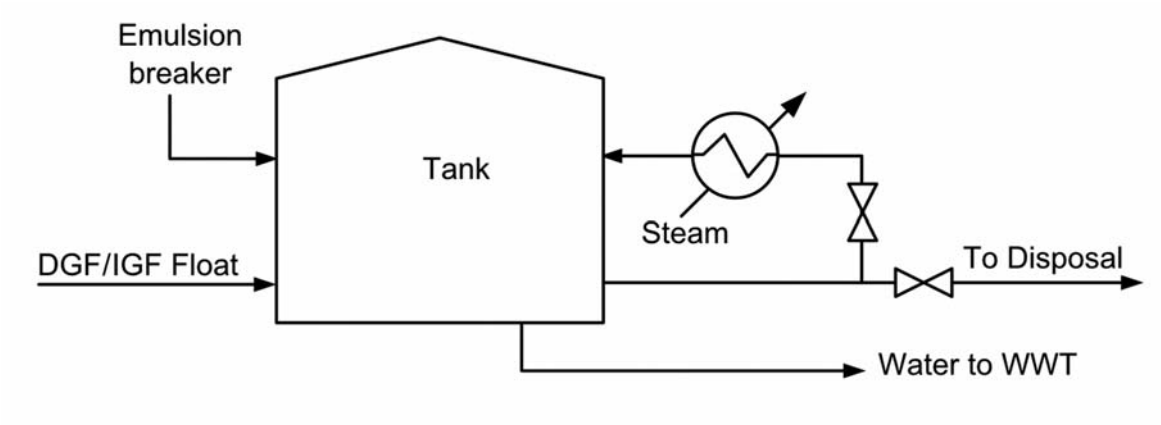

Waste biological sludge

Excess sludge that is produced in a biological system can be disposed of (after pretreatment) in several ways, depending on local regulations, including:

- land farming;
- land fills; and
- off-site disposal.

Typical pretreatment of biological sludge is shown in Figure 31.

The biological sludge is sent to a thickener, which could be a gravity or DAF thickener, where water is separated from the sludge and returned to WWT, The sludge from the Thickener is sent to an aerobic digester where air is added to digest the sludge. This step is essentially a volume reduction step to lessen the load on the downstream filter. In some cases the sludge from the Thickener is sent to the Filter. Several types of filters such as belt filter presses, plate and frame filters etc can be used. The type of filter that is most appropriate will need to be evaluated on a case-by-case basis.

Figure 31 *Biological sludge treatment*

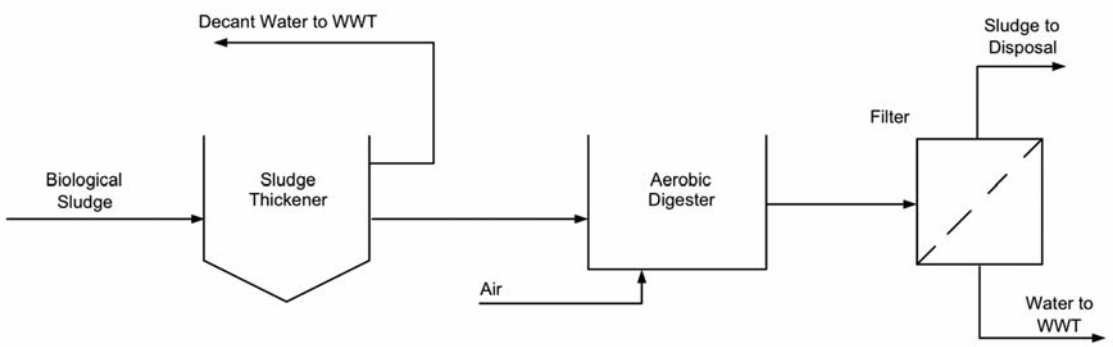

Recycle and reuse issues

With the shortage of fresh water in most areas of the world, and the requirements for relatively high volumes of raw water in a refinery, the pressure to recycle and/or reuse of water is increasing. In evaluating recycle/reuse issues in a refinery, the potential uses of water should be evaluated along with recycle/reuse of refinery wastewater as well as external sources of wastewater (such as municipalities).

The water uses in the refinery can be broken down as follows:

- process water:
  - desalter makeup;
  - coker quench water;
  - coker cutting water;
  - flare seal drum;
  - FCC scrubbers;
  - hydrotreaters;
- boiler feedwater makeup;
- cooling water makeup;
- potable water;
- fire water; and
- utility water.

Table 10 *Contaminant specification for reuse water*

Water category	Contaminant specification	Potential source of re-use water
Desalter makeup	• Sulphide: < 10 mg/l • Ammonia: < 50 mg/l • Total dissolved solids (TDS): < 200 mg/l	• Stripped sour water • Vacuum tower overhead • Crude tower overhead
Coker quench water	• Total suspended solids: < 100 mg/l • Biological solids: none • H_2S and other odorous compounds: none	• Stripped sour water
Coke cutting water	• Total suspended solids: < 100 mg/l • Biological solids: none • H_2S and other odorous compounds: none	• Stripped sour water
Boiler feedwater makeup (quality required is highly dependent on the pressure of steam being produced)	• Conductivity: < 1 µS/cm • Hardness: < 0.3 mg/l • Chlorides: < 0.05 mg/l • Sulphates: < 0.05 mg/l • Total silica: < 0.01 mg/l • Sodium: < 0.05 mg/l • Dissolved oxygen: < 0.007 mg/l	• Treated and upgraded refinery wastewater
Cooling tower makeup	• Conductivity: < 6,000 µS/cm • Alkalinity: < 3,000 mg/l • Chlorides: < 1,500 mg/l • Suspended solids: < 150 mg/l	• Treated and upgraded refinery wastewater

From the list of water uses on the previous page, the process water, boiler feedwater makeup and cooling tower makeup represent the largest users and are ideal candidates for use of recycled water. Table 10 shows the typical specification of contaminant levels required for these waters.

These values should be used for general informational purposes only. A detailed evaluation of the refinery specific application in question is required before initiating any water re-use.

Re-use of non-contaminated stormwater

Many opportunities exist for reuse of non-contaminated stormwater. Some examples of applications for collected non-contaminated stormwater runoff are described below.

Fire water

Fire drills and actual fire events at refineries require large volumes of fire water. During emergencies, firewater is usually drawn from an on-site storage and supplemented by an outside source such as rivers, lakes etc. Non-contaminated stormwater can be directed to the fire pond in the refinery for storage and reused in the fire water system as required.

Cooling tower makeup water

Cooling tower systems require a constant source of water for makeup due to losses from drift, evaporation and blowdown. Non-contaminated stormwater may be used for this purpose, though it will require some treatment to remove particulates before entering the cooling tower system. Water softening may also be required if calcium and magnesium is picked up from the impoundment used to store the non-contaminated stormwater.

Utility water

Refinery utility water systems use non-potable, non-contaminated water. Utility water may be used for any purpose in the refinery where water is needed, such as paved area wash-down and wash water for spill clean-ups. Stormwater may be collected and pumped from storage into the plant utility water supply header. As with any water reuse system, the source of the water, its quality and potential contaminants must be monitored and deemed acceptable for all designated uses.

Boiler feedwater makeup

Demineralization systems are required for boiler makeup water to avoid boiler scaling. Non-contaminated stormwater can be used as makeup to the BFW makeup system. It will need pretreatment for solids removal and additional treatment to remove hardness prior to use as BFW makeup.

Technologies for upgrade of refinery wastewater

All the options available for upgrade of refinery wastewater utilize one or more filtration processes for treatment, including some membrane treatment options. Membrane treatment technologies have become increasingly popular (although they have their limitations due to cost) in the water and wastewater treatment industry over the past 20 years, and offer significant advantages over more traditional treatment options. Figure 32 shows the size of contaminants that can be removed through different types of filtration, and provides sizes for some common particles for reference.

The following options are considered potentially suitable for treating refinery effluent:

- basic media/sand filtration;
- microfiltration or ultrafiltration;
- microfiltration or ultrafiltration, with reverse osmosis;

Figure 32 *Contaminant removal for different types of filtration processes*

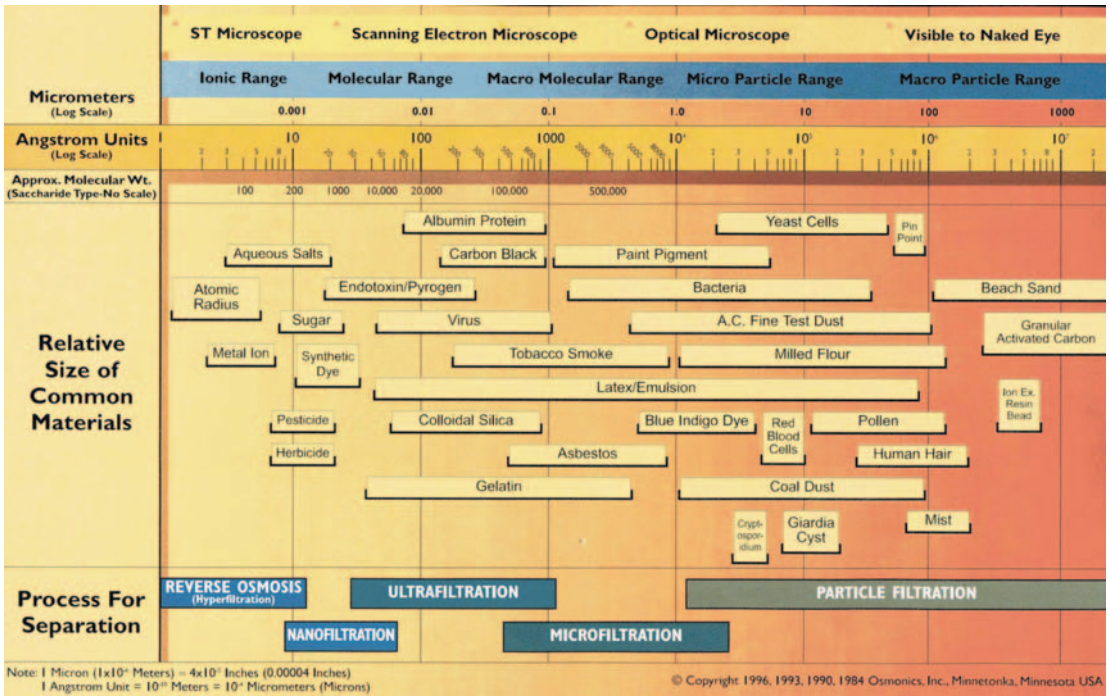

(Reproduced courtesy of Osmonics)

- microfiltration or ultrafiltration with nanofiltration; and
- ion exchange softening.

The suitability of application of a particular technology is often site-specific and should be evaluated on a case-by-case basis. The following is a set of suggested criteria for evaluation:

- extent of prior application in refineries for wastewater reuse;
- ability to consistently achieve the required product water specification;
- operability and flexibility;
- capital and operating cost; and
- plot space requirements.

The following sections discuss the various technologies mentioned above.

It should be noted that none of these technologies are widely practiced in refineries. The refining industry is starting to look at these options as water costs increase but they are not yet commonplace. The technologies described below are options that should be considered by refineries based on regulatory and cost pressures in a local region.

Basic media/sand filtration

Sand or media filtration can be used to remove the gross solids and suspended solids found in the refinery effluent. Media filtration systems work by pushing the water through a vessel packed with a filter media such as sand or anthracite. Anionic or cationic polymers are often added to the feedwater to improve particle removal efficiency. This type of treatment generally removes contaminant particles greater than approx 5 μm in size.

Media filtration systems need to be backwashed periodically through reversal of the flow through the system. Backwashes are initiated when the differential pressure across the filter reaches a pre-determined set point. Backwashing produces an

Figure 33 *Media filtration*

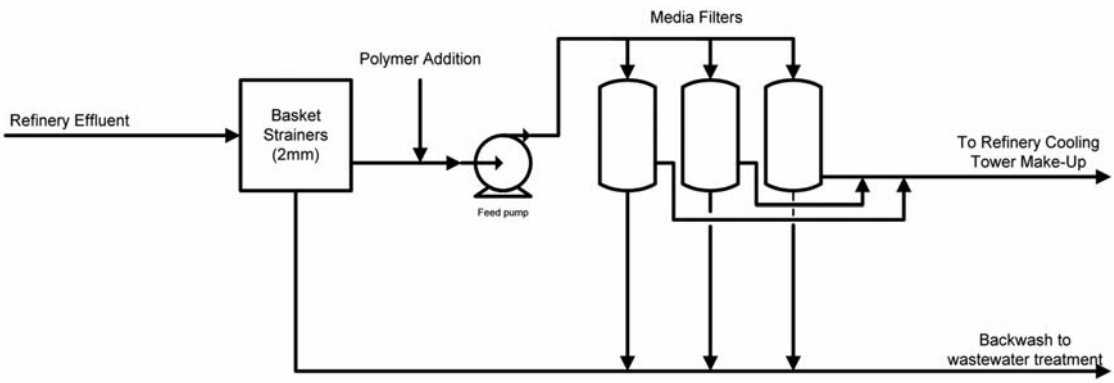

intermittent wastewater stream averaging approximately 5% of the feed flow. Media filtration systems have a relatively small footprint and energy demand. Filter backwashes can be sent back to the head of the refinery WWTP.

Figure 33 shows a process schematic of a typical media filtration system.

The key disadvantage for this type of system is that it will offer no removal of dissolved inorganic compounds (salts) or metals, and thus media filtration alone will not improve the quality of the refinery effluent sufficiently for it to be used as either cooling tower make-up water or feedwater to the demineralized water production system.

Media filtration as a standalone technology is not considered to be a viable option for the treatment of the refinery effluent, either for reuse as BFW makeup or cooling tower make-up, but could be used for other purposes such as utility water or emergency fire water.

Microfiltration or ultrafiltration

Microfiltration (MF) or ultrafiltration (UF), like media filtration, can be used to remove fine suspended solids found in the refinery effluent. As shown in Figure 32, there is a significant overlap between these processes in terms of the size of particles they will remove. Microfiltration can remove particles greater than approximately 0.1 μm while ultrafiltration will remove particles down to approximately 0.01 μm.

Both MF and UF are pressure driven membrane separation processes that separate particulate matter from soluble components in the carrier fluid (water). Using a hollow fibre outside in membrane configuration is the most suitable, as this tends to give fewer problems with suspended solids fouling, and also tends to be more robust in its ability to deal with feedwater quality aberrations.

Most materials that are used in MF and UF membrane manufacture are polymeric and are naturally hydrophobic. Common materials used include: polysulphone, polyethersulphone, polypropylene or polyvinylidene fluoride. Because of the hydrophobic nature of the membrane materials, they are highly susceptible to organic fouling by oil and grease. For this reason most MF and UF manufacturers have a typical specification of <1 mg/l oil and grease. In order to remove dissolved and emulsified oil and grease, granular activated carbon (GAC) pretreatment is typically used.

Figure 34 *Microfiltration or ultrafiltration*

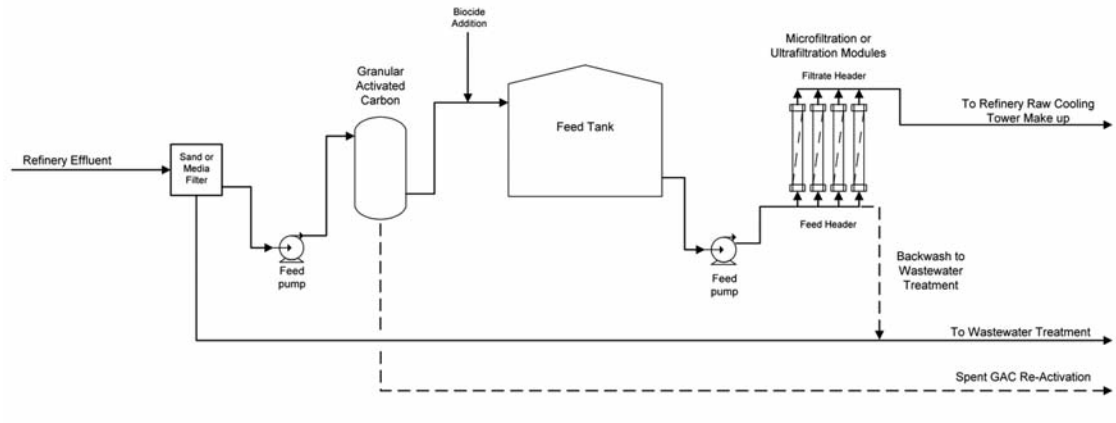

New generation ceramic microfiltration membranes are under development by a number of membrane manufacturers, and have been developed specifically for dealing with oily wastewaters, such as refinery effluents, and produced water from exploration and production activities. Figure 34 shows a system using microfiltration or ultrafiltration with GAC pretreatment.

The first unit operation employed is a sand filter or media filter, for the removal of gross solids, such as sand and plastic debris which may have passed through the refinery WWTP, or blown into the open treatment ponds, and the majority of the biological solids which have escaped the treatment ponds. Any oil bound to solids will also be removed in this step, thus lowering the oil and grease content of the feedwater and reducing the loading on the next process. Note that while the addition of polymers or flocculants will improve the performance of the filter, this is not recommended, as they can rapidly foul membrane surfaces.

The next step is granular activated carbon for the removal of oil, grease and trace amounts of hydrocarbons still present in the effluent, which could potentially foul or damage the MF/UF membranes. Spent GAC will need to be periodically regenerated, at a rate dependent on the oil content of the refinery effluent. This can be performed on-site if infrastructure is installed, or more commonly taken off-site for regeneration by the GAC vendor.

The feed tank serves to balance flows to filtration system when the GAC, or MF/ UF units need to backwash. A biocide such as chlorine or chloramines is also added to prevent biological growth in the system and biofouling of the membranes.

The water is then forced through a set of membranes either by pressure or vacuum (pressure, in this schematic), leaving particulates and colloidal matter on the feed side of the membrane. The transmembrane pressure (TMP) will slowly increase over time as the solids accumulate, requiring the system to be backwashed to remove the fouling layer. Periodic cleaning using disinfectants such as sodium hypochlorite, or acid and caustic, are required to remove accumulated contaminants not removed by backwashing.

Microfiltration and ultrafiltration will both produce a very clear filtrate with <1 mg/L suspended solids. However, like media filtration, both processes will not be able to achieve any significant reduction in the presence of dissolved salts and metals present in the refinery effluent, in order to make the water suitable for supplementing the cooling tower or demineralized water supplies to either refinery.

Microfiltration, as a stand alone technology, is not considered to be a viable option for the treatment of refinery effluent for either BFW makeup or cooling tower make-up, but the treated effluent can be used for other purposes such as utility water or emergency fire water.

Microfiltration or ultrafiltration, with reverse osmosis

Unlike the media filtration and the MF/UF options, reverse osmosis (RO) can remove the dissolved salts and metals found in the refinery effluent, potentially producing a product water suitable for reuse at the refinery. Reverse osmosis membranes have an extremely fine pore size of less than 0.001 μm which is smaller than most contaminants found in water. RO membranes will selectively allow the passage of pure water with the exclusion of salts at 99% rejection rates or higher.

Due to the small pore size and polyamide membrane composition, RO membranes are even more susceptible to fouling by oil and hydrocarbons than MF or UF membranes. Most membrane manufacturers recommend <0.1 mg/l oil and grease in the RO feedwater, and cases have been documented where as little as 0.001 mg/l of a hydrocarbon in the feedwater has irreversibly fouled RO systems. This further emphasizes the need for effective oil and grease removal pretreatment.

Figure 35 is a schematic flow diagram for a suitable reverse osmosis system, incorporating GAC pretreatment for oil removal.

Like the previous MF/UF options, the first process is gross solids removal using a sand or media filter to reduce the loading and prevent blocking of the GAC column. The next step in the process is GAC removal of dissolved organics, oil and grease. Spent GAC will need to be periodically regenerated either on-site or off-site.

Following the GAC, biocide addition and a small balance tank are shown. The most common biocide used in these applications is monochloramine, as chloramines are less likely to oxidize the RO membranes than free chlorine. Due to the very fine pore size of RO membranes, they are susceptible to blockage/plugging by suspended solids, which can include broken GAC granules and fines shed from the GAC pretreatment. Therefore, microfiltration or ultrafiltration pretreatment should be installed

Figure 35 *Microfiltration or ultrafiltration, and reverse osmosis*

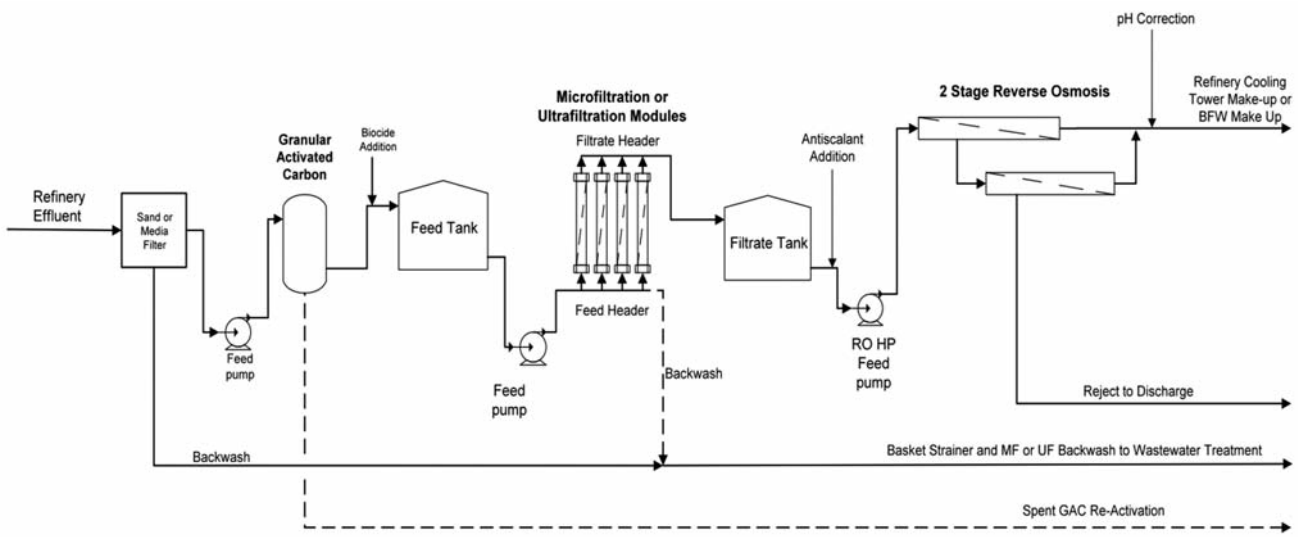

upstream of the reverse osmosis system. The use of this technology will allow the reuse of the refinery effluent for all purposes in the refinery; note however that discharge of ultrafiltration reject water can become a significant issue because inorganic contaminants such as metals will increase in concentration and may not meet concentration-based discharge limits, leading to additional treatment costs.

Microfiltration or ultrafiltration, with nanofiltration

Nanofiltration (NF) is a moderate pressure membrane process commonly used for removal of select dissolved organic compounds and water softening. Nanofiltration and reverse osmosis systems share many common features in terms of their design and operation. Standard NF membrane elements share the same physical dimensions as standard RO membrane elements and are loaded into standard RO membrane pressure housings. For these reasons, nanofiltration systems look much the same as reverse osmosis systems. The key difference between the two processes is that salt rejection of reverse osmosis systems is much higher, and consequently so are the operating pressures. Nanofiltration can be thought of as essentially like a low pressure, low stringency RO system. NF generally has a low rejection for metals.

NF membranes offered by the major manufacturers are somewhat tailored to different applications and are available with varying levels of efficiency in removal of salts and/or organics, depending on the application. One major application of NF is water softening before further treatment such as reverse osmosis or ion exchange.

A process description is not included for this option as it is essentially the same as for reverse osmosis, however a schematic flow diagram is given in Figure 36.

Ion exchange

Ion exchange softening is another viable option for the removal of the dissolved inorganic compounds found in the refinery effluent. Unlike the previous options discussed, ion exchange is not strictly a filtration process, although some filtration will occur as the feedwater passes through the packed resin bed. Some suspended solids loading on the resins may be acceptable, depending on the system design.

Ion exchange works by passing the feedwater through a packed bed of anion or cation exchange resins which exchange the undesirable ions present in the feedwater, such as calcium and magnesium, with more desirable ions such as the hydronium

Figure 36 *Microfiltration or ultrafiltration, with nanofiltration*

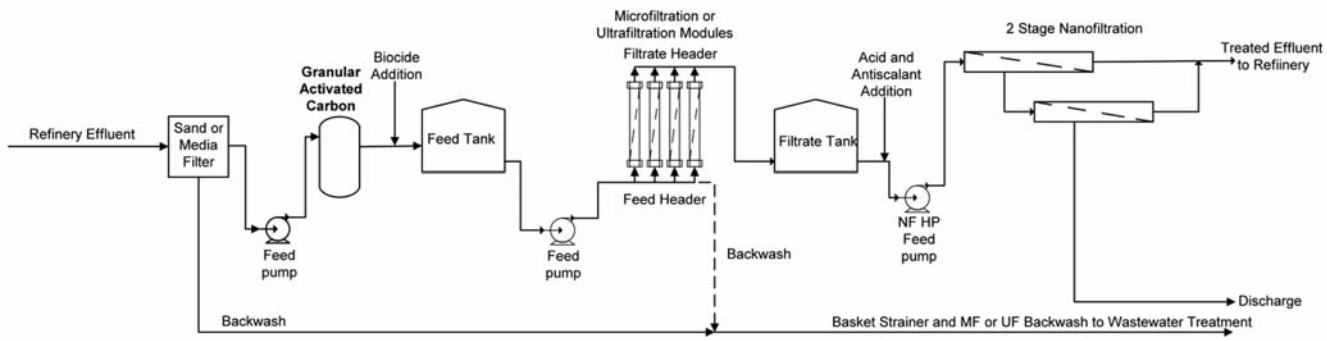

Figure 37 *Ion exchange treatment*

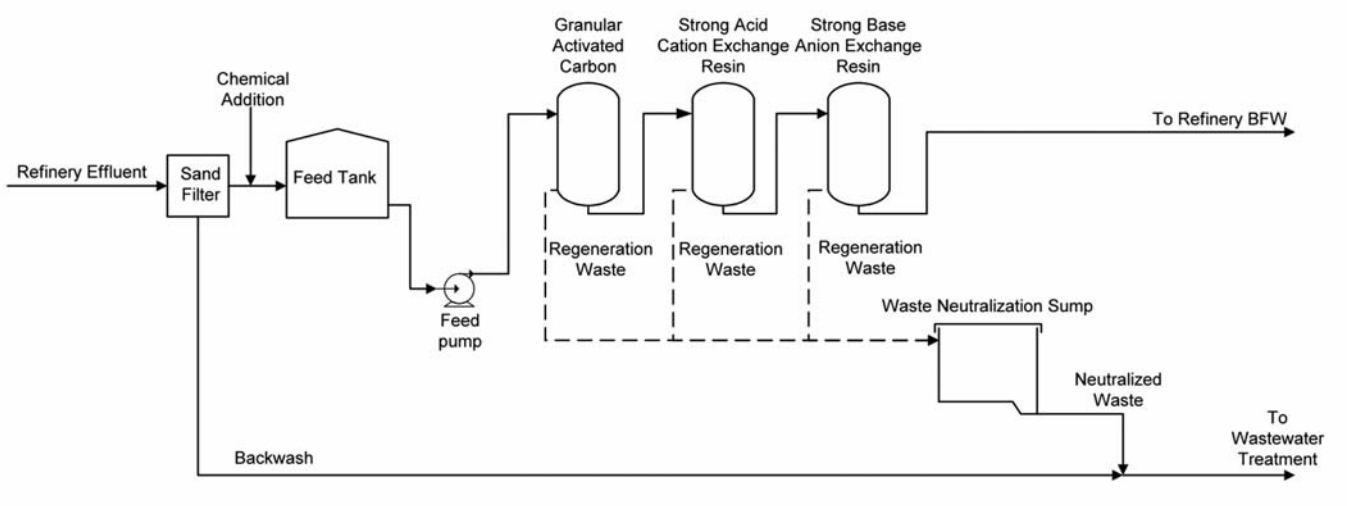

(H+). Ion exchange is a reversible process and the ion exchanger can be regenerated or loaded with desirable ions by washing with an excess of these ions. Eventually the resins need to be replaced due to gradual breakdown and irreversible fouling.

Ion exchange could be used to treat the refinery effluent to a suitable standard for supplementing the raw feedwater to the refinery using weak acid and base resins, or alternately stronger resins could be used to treat the effluent all the way to boiler feedwater quality. Complete treatment to boiler feedwater quality is probably the most cost-effective option if this technology were to be employed.

A schematic flow diagram of an ion exchange system suitable for treating the refinery effluent is shown in Figure 37.

Treated refinery effluent enters the sand filters for removal of large particulates. Again, a small balance tank is required to balance flows to the ion exchange system when the strainers need to backwash.

The organics scavenger is a selective media such as GAC, or similar, which can remove dissolved organics in the feedwater. Organics removal should be considered since dissolved organic material in the refinery effluent can rapidly and irreversibly foul ion exchange resins.

Post organics removal, the wastewater is then fed through a multiple bed ion exchange process. A recovery rate of around 70% should be achievable and depends on the feedwater TDS, which makes this option comparable to the RO and NF options in this regard. Ion exchange systems produce an intermittent waste stream (that requires disposal) which require neutralization, and are normally very high in salts and contaminants.

Various studies have been conducted in the past to determine whether ion exchange alone or reverse osmosis followed by ion exchange is the most cost-effective option for high purity water production. While the cost-effectiveness of these options tends to vary with plant size, feedwater TDS and the relative costs of power and chemicals, the so called 'salinity break even' point for a moderate-sized system is approximately 350–400 mg/l (as $CaCO_3$ equivalent). Reverse osmosis systems tend to be more cost-effective over this threshold value, due to their relative insensitivity with feedwater TDS. At

higher TDS values, regeneration chemicals for ion exchange are prohibitively expensive. Ion exchange is more cost-effective for lower salinities.

Technology summary—refinery wastewater reuse

Table 11 summarizes the technologies available for refinery wastewater reuse.

As mentioned before, none of these technologies are widely practiced in refineries. The refining industry is starting to look at these options as water costs increase, but they are not yet commonplace. The technologies summarized below are options that should be considered by refineries based on regulatory and cost pressures in a local region.

Reuse of municipal wastewater

In this section municipal wastewater refers to water from external municipalities and not municipal wastewater that is generated within the refinery. Municipal wastewater generally consists of :

- grey water, e.g. water from bathing, hand washing and clothes washing; and
- black water, e.g. water from kitchen sinks and toilets.

Typically these waters, together with stormwater, are treated in a common wastewater treatment plant by the local municipality which consists of primary treatment (sand and grit removal) followed by biological treatment. The effluent from these plants can be upgraded such that they could be used in the refinery for either cooling tower makeup or BFW

Table 11 *Refinery wastewater reuse—summary*

Technology	Suitability
Media filtration	Removes suspended solids but not dissolved solids. Treated water not suitable for cooling water or boiler feedwater makeup but can be used for other uses such as utility water or fire water.
Ultrafiltration or microfiltration	Removes suspended solids (to a greater extent than media filtration) but not dissolved solids. Treated water not suitable for cooling water or boiler feedwater makeup but can be used for other uses such as utility water or fire water.
Ultrafiltration or microfiltration, with reverse osmosis	Removes both suspended and dissolved solids. Treated water suitable for all uses in the refinery including cooling tower and boiler feedwater makeup
Ultrafiltration or microfiltration, with nanofiltration	Removes both suspended and dissolved solids. Treated water suitable for all uses in the refinery including cooling tower and boiler feedwater makeup. Salt rejection is lower than reverse osmosis but this system can be operated at a lower pressure than RO systems
Ion exchange	Removes both suspended and dissolved solids. Treated water suitable for all uses in the refinery including cooling tower and boiler feedwater makeup. Usually applicable when the dissolved solids concentration is less than 400 mg/l.

Figure 38 *Media filtration*

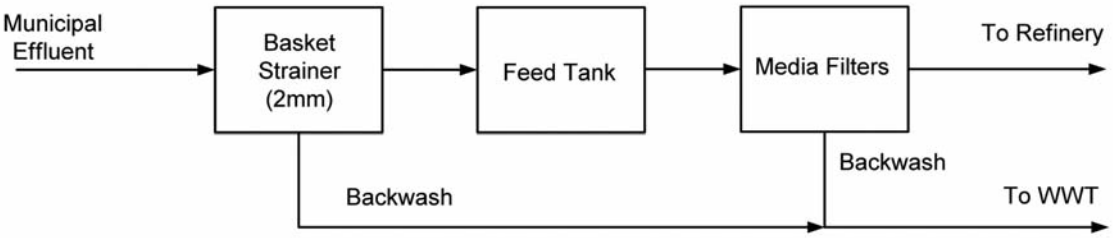

makeup. The following considerations need to be taken into account when considering the reuse of municipal wastewater:

- Cost of conveyance of the wastewater from the municipal wastewater treatment plant to the refinery (includes piping and other infrastructure).
- Capital and operating costs for pumping the wastewater to the refinery.
- The quality of the available effluent: this will dictate the level of treatment required to enable reuse in the refinery.
- The discharge of the effluents (such as backwashes and RO reject) from the system is also an important consideration. The ideal scenario would be to be able to return these streams back to the municipal wastewater treatment plant, but this might not be feasible due to the capital and operating costs involved. If they need to be discharged by the refinery then the potential impacts of the contaminants contained in them could be problematic.

The situation sometimes arises where groups of industries are clustered close to a municipal treatment plant. When this happens, joint approaches—where municipalities are willing to make investments to improve the water quality by installing reverse osmosis streams, manage the reject themselves and send a much better quality water stream to the industrial users—make better economic sense than each industrial user installing its own RO stream.

The technologies available for upgrading municipal wastewater are similar to those discussed in the sections above, except that some pretreatment and post treatment is typically required. The technologies that can be used to upgrade municipal wastewater for reuse in the refinery are discussed below. To avoid repetition, detailed descriptions of each technology are not included, but any differences between those discussed in the sections above are highlighted.

Media filtration

Figure 38 shows a block flow diagram of a media filtration system The system is the same as that described on pages 44–45, except that the municipal effluent is first sent to basket strainers to remove any large solids prior to being sent to the feed tank, and then sent to the media filters. The effluent from the media filters will not be suitable for use as BFW makeup or cooling tower makeup but can be used for other purposes such as utility water or emergency fire water.

Microfiltration or ultrafiltration

Figure 39 shows a block flow diagram of a microfiltration/ultrafiltration system. The system is the same as that described on pages 45–46, except that the municipal effluent is first sent to basket strainers to remove any large solids prior to being sent to the feed tank, and then sent to the media filters. The water from the media filter is then sent to

Figure 39 *Microfiltration/ultrafiltration*

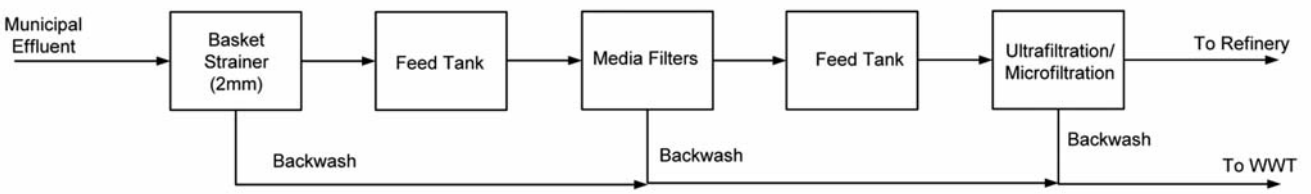

the UF/MF modules for filtration of finer particles. The effluent from the MF/UF will not be suitable for us as BFW makeup or cooling tower makeup, but can be used for other purposes such as utility water or emergency fire water.

Microfiltration or ultrafiltration, plus reverse osmosis

Figure 40 shows a block flow diagram of this system. The system is similar to the one described on page 47, with the addition of the reverse osmosis system downstream of the MF/UF filters. Due to the fact that CO_2 (present as a dissolved gas in the wastewater) is a small uncharged molecule, dissolved CO_2 tends to be poorly rejected by RO membranes, and ends up in the permeate stream. This has the effect of lowering the pH of the RO permeate and raising the pH of the RO reject from that of the initial feedwater. pH adjustment of the RO permeate through acid or caustic addition is feasible, but tends to be difficult to control due to the limited concentration of bicarbonate to buffer the pH. For these reasons, a degasser tower is the most commonly employed method of pH correction downstream of the RO. A forced draft degasifier works by contacting forced air coming in with the RO permeate in a packed column to strip the dissolved CO_2 from the RO permeate. A vacuum degasifier would also be suitable.

The dissolved CO_2 concentration is also dependent on pH. Typical operating pH for a reverse osmosis system treating municipal effluent is in the range of 6.0–6.5. Operating at a slightly acidic pH helps to control inorganic scale formation, lower chemical dosing and maximize recovery. It also tends to convert dissolved bicarbonate to dissolved carbon dioxide gas.

Figure 40 *Microfiltration/ultrafiltration plus reverse osmosis*

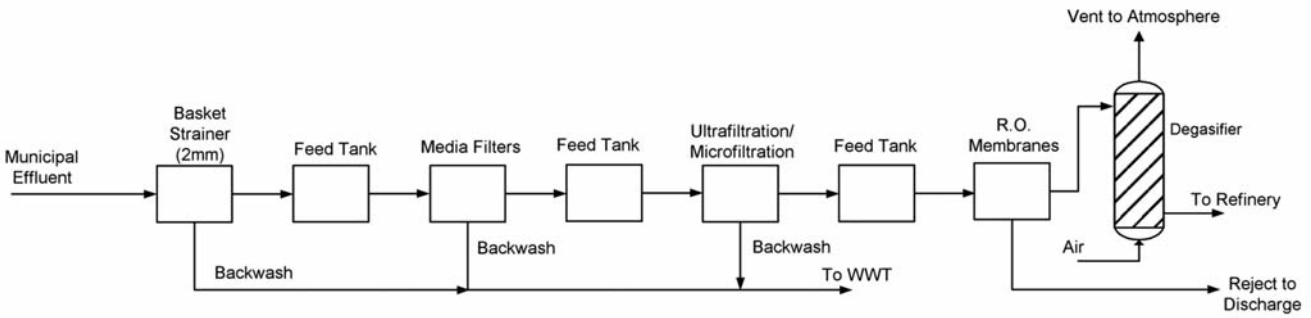

Figure 41 *Microfiltration/ultrafiltration plus nanofiltration*

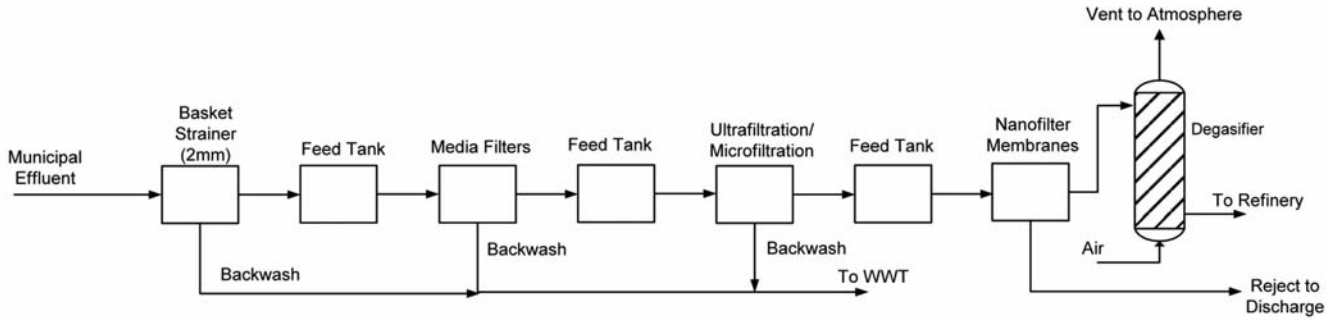

Microfiltration or ultrafiltration, plus nanofiltration

Figure 41 shows a block flow diagram of this system. The system above is the same as that shown on page 48, except that the reverse osmosis membranes are replaced by nanofiltration membranes.

Ion exchange

The system for ion exchange is the same as that shown on pages 48–49 and is not repeated here.

Zero liquid discharge

The recycling/reuse options and technologies discussed in the sections above result in the need to discharge a concentrated brine stream that comes from the reverse osmosis/nanofiltration reject. At some refineries, depending on the location and local conditions, it might be problematic to dispose of this stream off-site. The reasons for this could include:

- high cost due to the fees that might be imposed in discharging a concentrated brine stream;
- only option being discharge to a fresh water stream (due to location of refinery); regulatory authorities usually do not allow discharges of brine into fresh water streams;
- aquatic toxicity restrictions on the discharge stream (the concentration of contaminants, primarily metals, in the brine could prevent the passing of a toxicity test); and
- concentration of metals in the brine could exceed concentration-based discharge limits.

In such cases zero liquid discharge (ZLD) needs to be considered. In a ZLD system the brine that is

Figure 42 *ZLD block flow diagram*

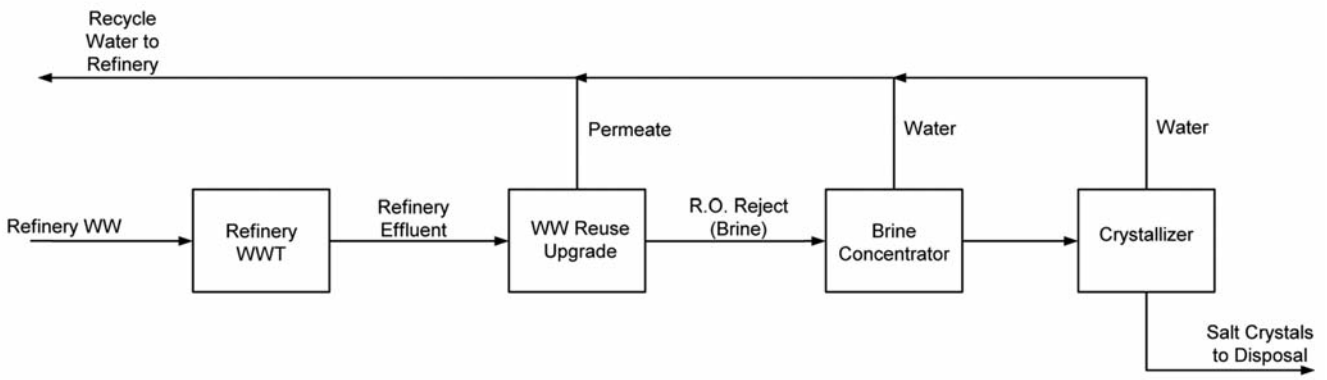

usually discharged from a wastewater reuse system is further treated to extract more water and separate the dissolved solids that are left as solid crystals for disposal. The water that is removed is sent back to the refinery for recycle.

Figure 42 shows a block flow diagram of a typical ZLD system.

It should be noted that application of ZLD in refineries is very rare, in part because the energy requirements are very high. The possible use of this approach needs to be evaluated on a site-specific basis. It is included in this document for information purposes.

References

Rase, Howard F., and Barrow, M.H., *Project Engineering for Process Plants*, John Wiley and Sons Inc.

Beychok, Milton R., *Aqueous Wastes from Petroleum and Petrochemical Plants*, John Wiley and Sons Inc.

Evans, Frank L. Jr., *Equipment Design Handbook for Refineries and Chemical Plants*, Volumes 1 and 2, Gulf Publishing

Metcalf and Eddy, *Wastewater Engineering – Treatment and Reuse,* 4th Edition, McGraw Hill

American Petroleum Institute, *A Guide to Leak Detection for Above-Ground Storage Tanks*, Publication 334, First Edition, March 1996

American Petroleum Institute, *Welded Tanks for Oil Storage*, Downstream Segment, API Standard 650, Eleventh Edition June 2007, Addendum 1 June 2008.

US DOE, *Energy and Environmental Profile of the U.S. Petroleum Refining Industry*, December 1998.

Environmental Protection Agency, *Profile of the Petroleum Industry*, EPA/310-R-95-013, 1995.

IPIECA is the global oil and gas industry association for environmental and social issues. It develops, shares and promotes good practices and knowledge to help the industry improve its environmental and social performance; and is the industry's principal channel of communication with the United Nations.

Through its member led working groups and executive leadership, IPIECA brings together the collective expertise of oil and gas companies and associations. Its unique position within the industry enables its members to respond effectively to key environmental and social issues.

Company members

BG Group
BP
Chevron
CNOOC
ConocoPhillips
Eni
ExxonMobil
Hess
Hunt Oil
KPC
Mærsk
Marathon
Nexen
NOC Libya
Occidental
OMV
Petrobras
Petronas
Petrotrin
PTT EP
Qatargas
RasGas
Repsol YPF
Saudi Aramco
Shell
SNH
StatoilHydro
Talisman
Total
Woodside Energy

Association members

African Refiners Association (ARA)
American Petroleum Institute (API)
Australian Institute of Petroleum (AIP)
Canadian Association of Petroleum Producers (CAPP)
Canadian Petroleum Products Institute (CPPI)
The Oil Companies' European Association for Environment, Health and Safety in Refining and Distribution (CONCAWE)
European Petroleum Industry Association (EUROPIA)
International Association of Oil & Gas Producers (OGP)
Petroleum Association of Japan (PAJ)
Regional Association of Oil and Natural Gas Companies in Latin America and the Caribbean (ARPEL)
South African Petroleum Industry Association (SAPIA)
World Petroleum Council (WPC)

IPIECA
5th Floor, 209–215 Blackfriars Road, London SE1 8NL, United Kingdom
Telephone: +44 (0)20 7633 2388 Facsimile: +44 (0)20 7633 2389
E-mail: info@ipieca.org Internet: www.ipieca.org

© IPIECA 2010 All rights reserved.